2007 Vulcan 1600 Mean Streak PARTS DIAGRAM

Crankshaft

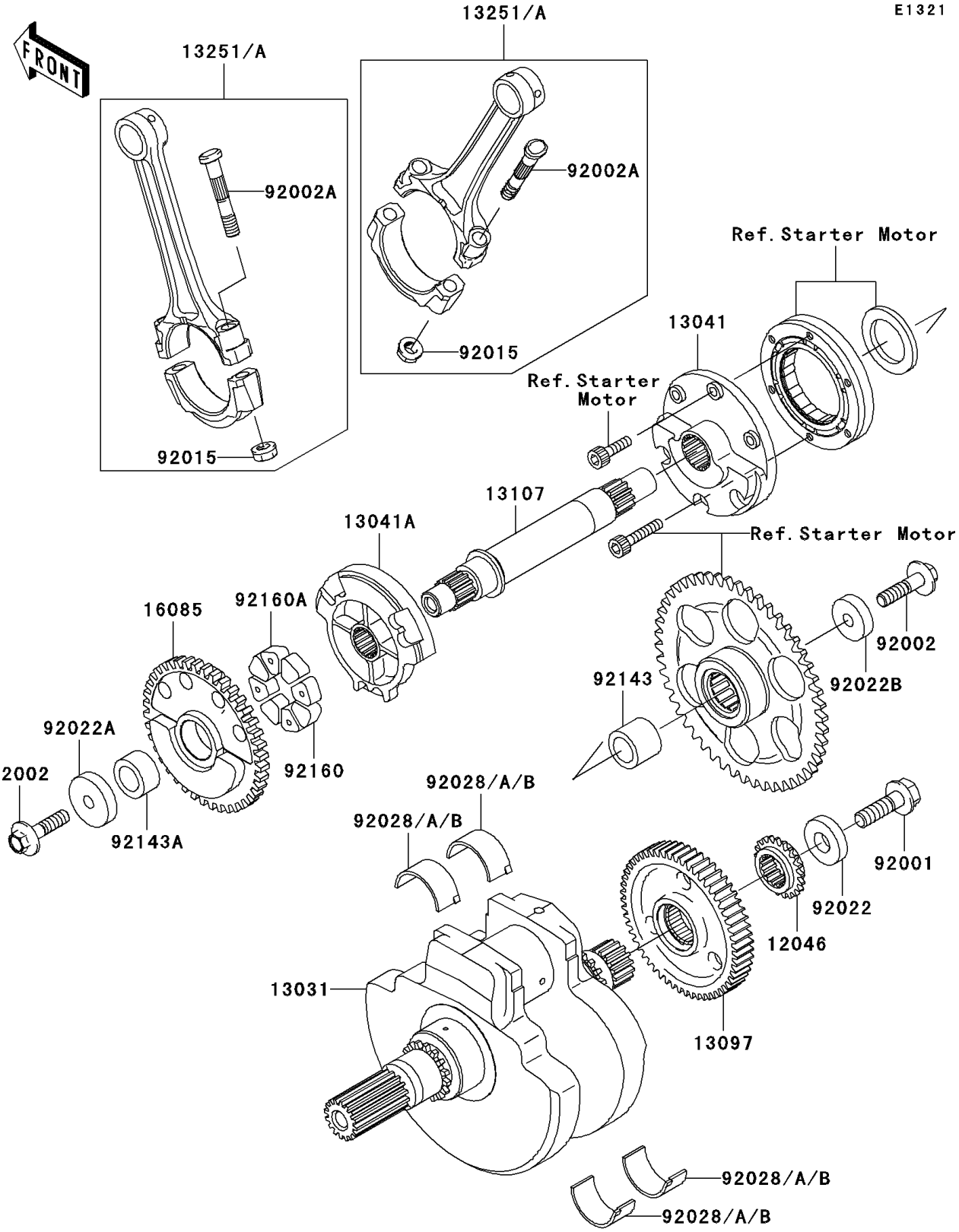

© 2024 Kawasaki Motors Corp., U.S.A.

2007 Vulcan 1600 Mean Streak PARTS LIST

Crankshaft

ITEM NAME	PART NUMBER	QUANTITY
SPROCKET,WATER PUMP (Ref # 12046)	12046-1103	1
CRANKSHAFT-COMP (Ref # 13031)	13031-0019	1
BALANCER,RH (Ref # 13041)	13041-1089	1
BALANCER,LH (Ref # 13041A)	13041-1093	1
GEAR-PRIMARY SPUR,56T (Ref # 13097)	13097-1369	1
SHAFT,BALANCER (Ref # 13107)	13107-1524	1
ROD-ASSY-CONNECTING,D (Ref # 13251)	13251-1147-DD	2
ROD-ASSY-CONNECTING,G (Ref # 13251A)	13251-1147-GG	2
GEAR,BALANCER,46T (Ref # 16085)	16085-1366	1
BOLT,FLANGED,12X40 (Ref # 92001)	92001-1146	1
BOLT,FLANGED,10X40 (Ref # 92002)	92002-1296	2
BOLT,CONNECTING ROD (Ref # 92002A)	92002-1896	4
NUT,CONNECTING ROD (Ref # 92015)	92015-1643	4
WASHER,12X40X6 (Ref # 92022)	92022-1904	1
WASHER,10X40X6 (Ref # 92022A)	92022-1905	1
WASHER,10X33X6 (Ref # 92022B)	92022-1906	1
BUSHING,CONNECTING ROD,BLUE (Ref # 92028)	92028-1474	AR
BUSHING,CONNECTING ROD,BLACK (Ref # 92028A)	92028-1475	AR
BUSHING,CONNECTING ROD,BROWN (Ref # 92028B)	92028-1476	AR
COLLAR,20X30X24 (Ref # 92143)	92143-1093	1
COLLAR,20X31X16 (Ref # 92143A)	92143-1821	1
DAMPER (Ref # 92160)	92160-1725	4
DAMPER (Ref # 92160A)	92160-1726	4

© 2024 Kawasaki Motors Corp., U.S.A.