1997 Vulcan 1500 Classic PARTS DIAGRAM

Footrests

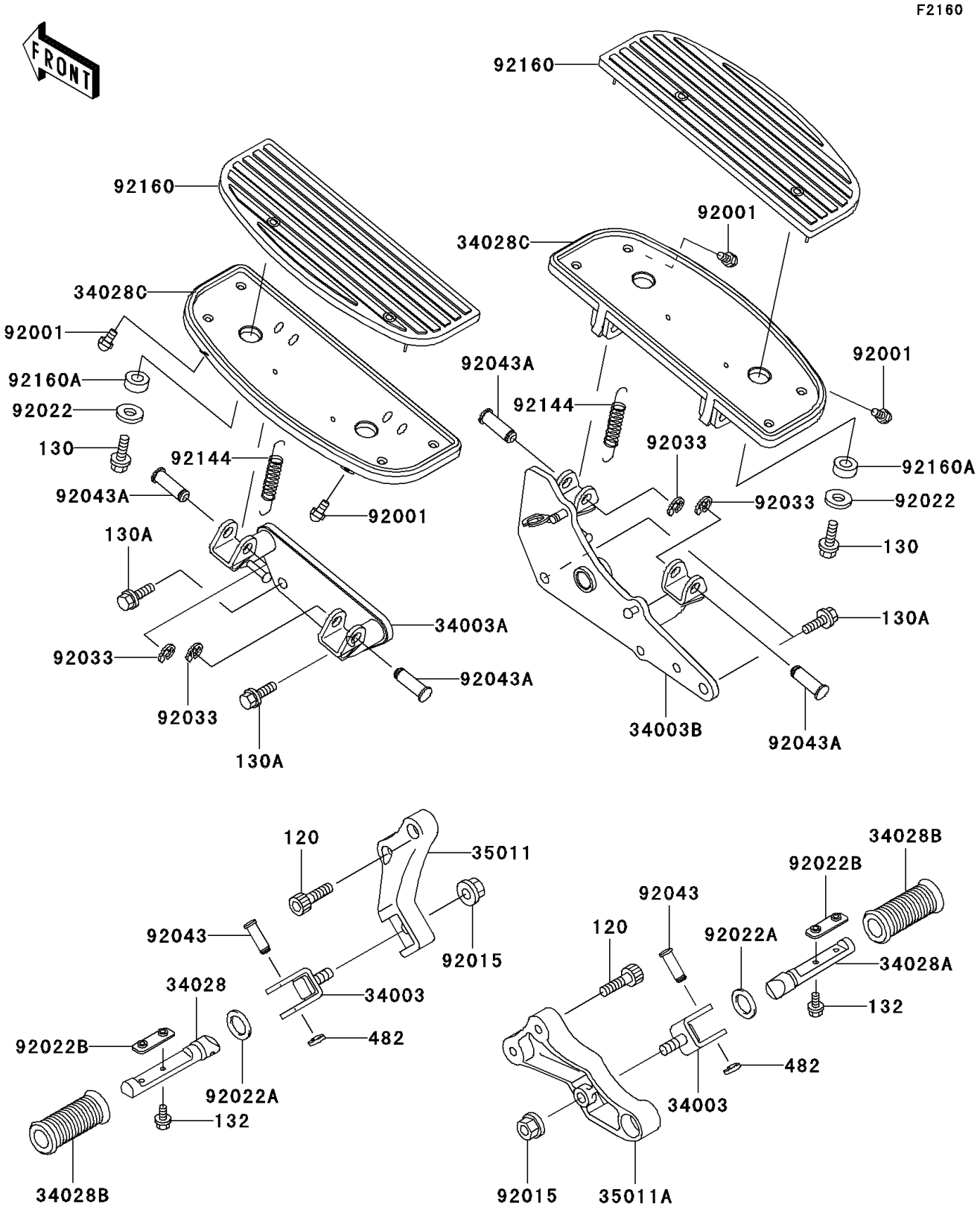

© 2024 Kawasaki Motors Corp., U.S.A.

1997 Vulcan 1500 Classic PARTS LIST

Footrests

ITEM NAME	PART NUMBER	QUANTITY
BOLT-SOCKET,8X25,BLACK (Ref # 120)	120S0825	4
BOLT-FLANGED,6X16,BLACK (Ref # 130)	130J0616	4
BOLT-FLANGED,10X30 (Ref # 130A)	130J1030	4
BOLT-FLANGED-SMALL (Ref # 132)	132J0510	4
CIRCLIP-TYPE-E (Ref # 482)	482L7000	2
HOLDER-STEP,RR (Ref # 34003)	34003-1292	2
HOLDER-STEP,FR,LH (Ref # 34003A)	34003-1448	1
HOLDER-STEP,FR,RH (Ref # 34003B)	34003-1449	1
STEP,RR,LH (Ref # 34028)	34028-1219	1
STEP,RR,RH (Ref # 34028A)	34028-1220	1
STEP,RR,RUBBER (Ref # 34028B)	34028-1221	2
STEP,FR (Ref # 34028C)	34028-1417	2
STAY,REAR STEP,LH (Ref # 35011)	35011-1770	1
STAY,REAR STEP,RH (Ref # 35011A)	35011-1771	1
BOLT,6X10 (Ref # 92001)	92001-1905	4
NUT,FLANGED,10MM (Ref # 92015)	92015-1428	2
WASHER,7X28X1.6,BLACK (Ref # 92022)	92022-1392	4
WASHER,20X30X2.3 (Ref # 92022A)	92022-1568	2
WASHER,STEP (Ref # 92022B)	92022-1874	2
RING-SNAP,10MM (Ref # 92033)	92033-1166	4
PIN,8X36.5 (Ref # 92043)	92043-1339	2
PIN,12X37 (Ref # 92043A)	92043-1358	4
SPRING,BRAKE PEDAL RETURN (Ref # 92144)	92144-1266	2
DAMPER,FRONT STEP (Ref # 92160)	92160-1727	2
DAMPER (Ref # 92160A)	92160-1728	4

© 2024 Kawasaki Motors Corp., U.S.A.