2022 MULE SX™

PARTS DIAGRAM

Frame Fittings

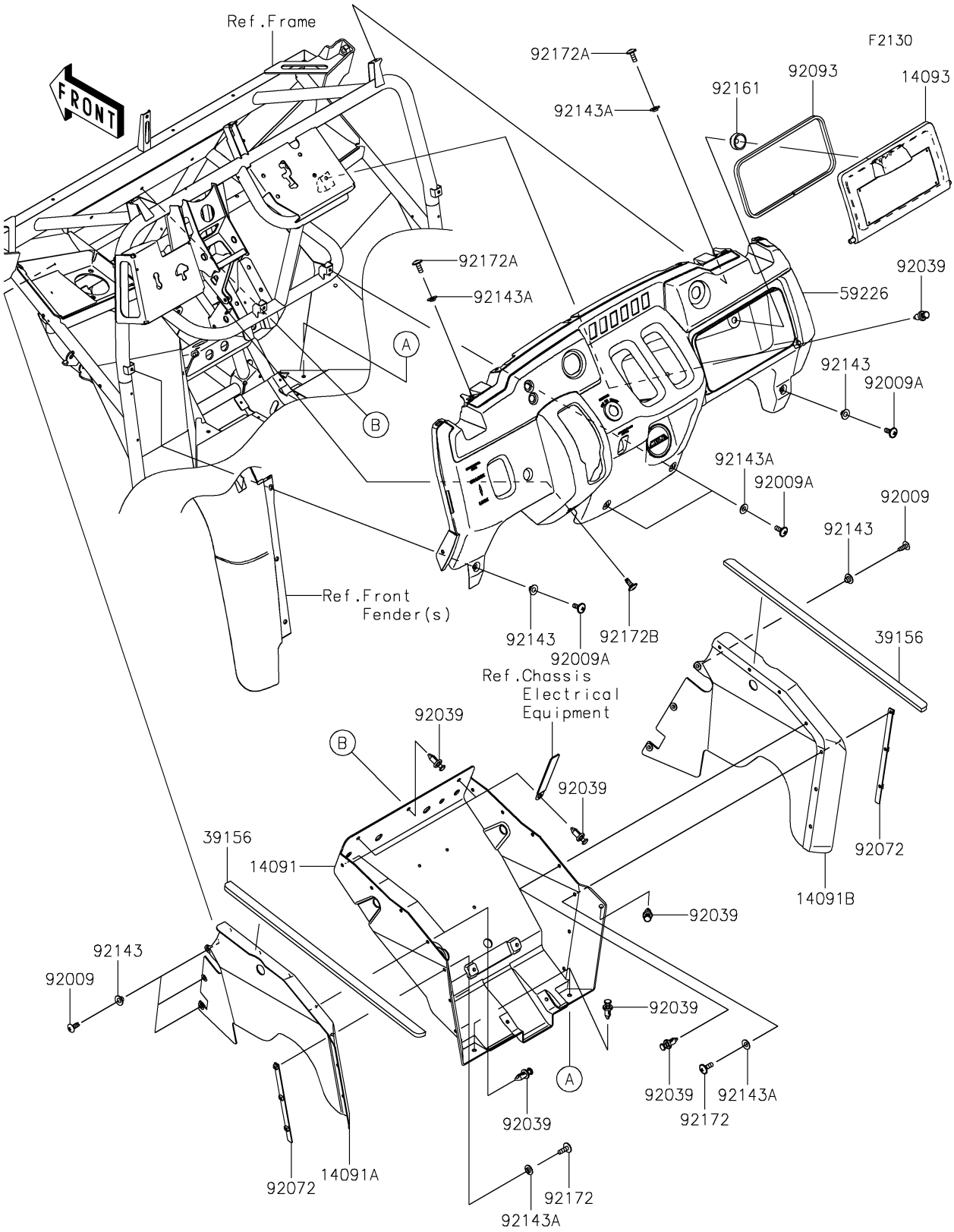

© 2026 Kawasaki Motors Corp., U.S.A.

2022 MULE SX™

PARTS LIST

Frame Fittings

ITEM NAME	PART NUMBER	QUANTITY
COVER,FLOOR,CNT (Ref # 14091)	14091-0408	1
COVER,FLOOR,SIDE,LH (Ref # 14091A)	14091-0424	1
COVER,FLOOR,SIDE,RH (Ref # 14091B)	14091-0425	1
COVER,GLOVE BOX (Ref # 14093)	14093-0396	1
PAD (Ref # 39156)	39156-0071	2
PANEL-CONTROL (Ref # 59226)	59226-0734	1
SCREW,TAPPING,6X16 (Ref # 92009)	92009-1166	6
SCREW,6X16 (Ref # 92009A)	92009-1621	4
RIVET (Ref # 92039)	92039-0776	16
BAND (Ref # 92072)	92072-0042	2
SEAL,6X10 (Ref # 92093)	92093-0658	1
COLLAR (Ref # 92143)	92143-1057	8
COLLAR (Ref # 92143A)	92143-1087	10
DAMPER (Ref # 92161)	92161-0568	1
SCREW,6X18 (Ref # 92172)	92172-0002	6
SCREW,6X16 (Ref # 92172A)	92172-0236	2
SCREW,6X16 (Ref # 92172B)	92172-0711	1

© 2026 Kawasaki Motors Corp., U.S.A.