2022 MULE SX™ PARTS DIAGRAM

Rear Axle

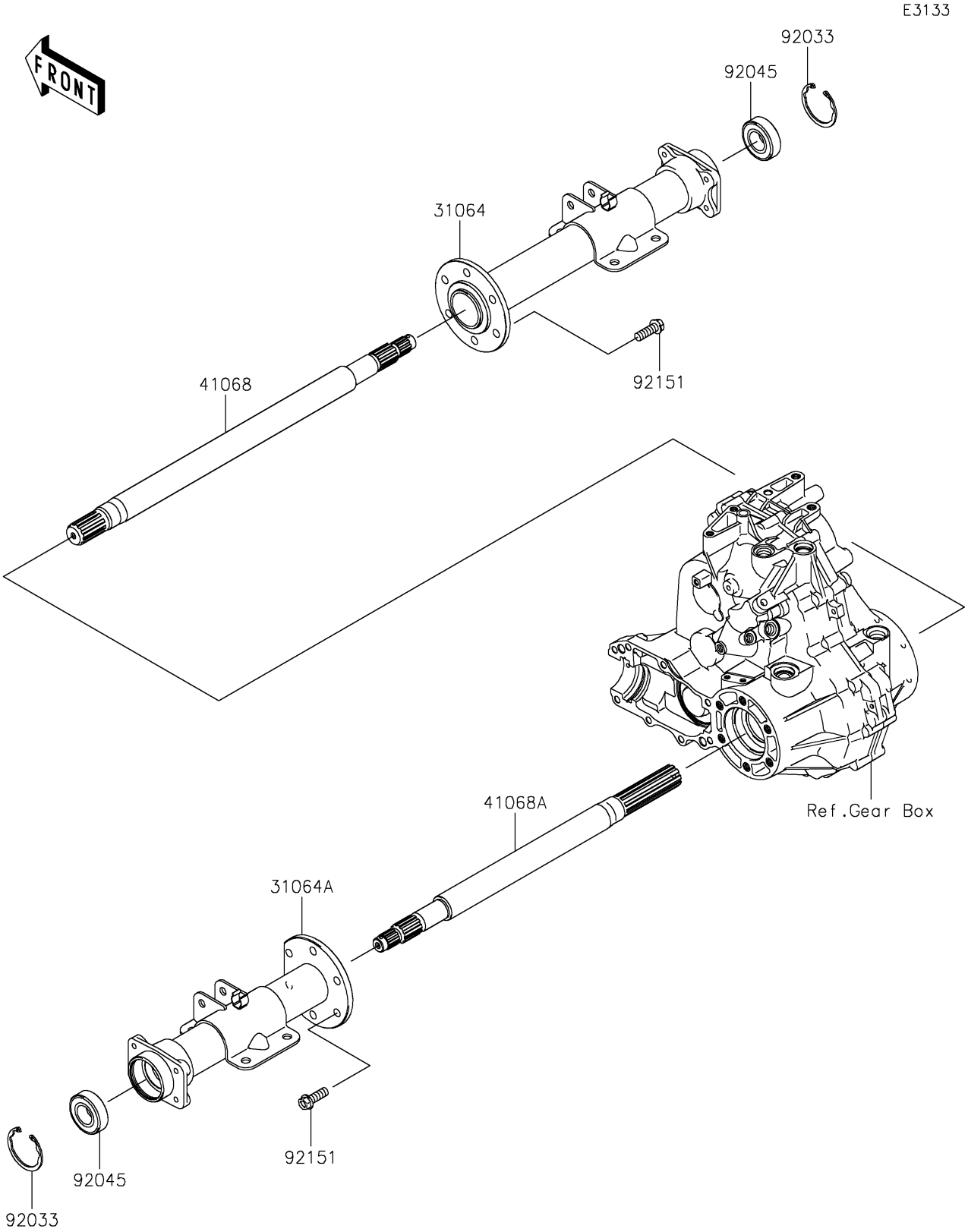

© 2024 Kawasaki Motors Corp., U.S.A.

2022 MULE SX™ PARTS LIST

Rear Axle

ITEM NAME	PART NUMBER	QUANTITY

© 2024 Kawasaki Motors Corp., U.S.A.