2019 KLX®150L PARTS DIAGRAM

Footrests

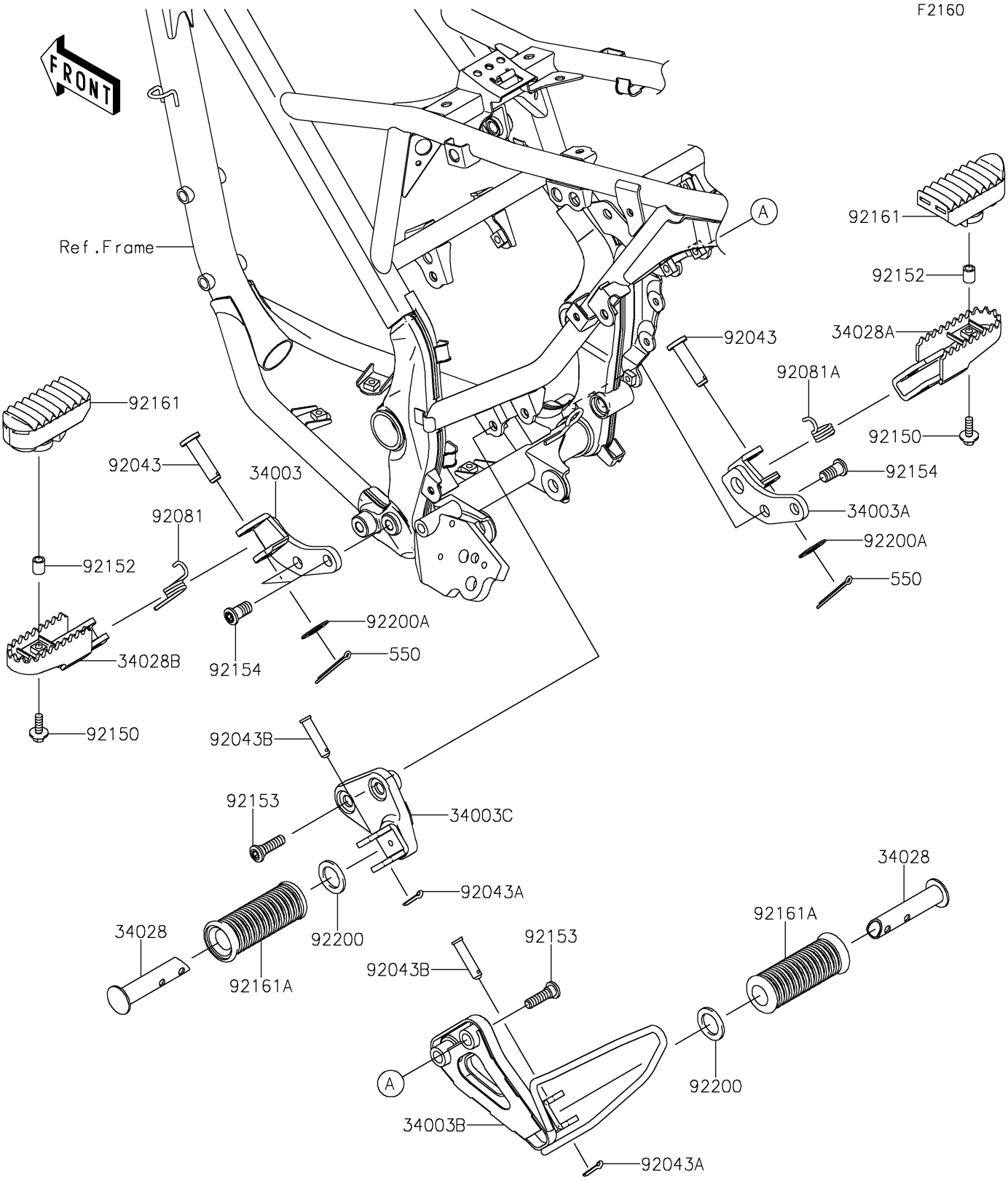

© 2025 Kawasaki Motors Corp., U.S.A.

2019 KLX®150L PARTS LIST

Footrests

ITEM NAME	PART NUMBER	QUANTITY
HOLDER-STEP,FR,LH,P.SILVER (Ref # 34003)	34003-0128-458	1
HOLDER-STEP,FR,RH,P.SILVER (Ref # 34003A)	34003-0131-458	1
HOLDER-STEP,RR,RH,P.SILVER (Ref # 34003B)	34003-0152-458	1
HOLDER-STEP,RR,LH,P.SILVER (Ref # 34003C)	34003-0160-458	1
STEP,RR (Ref # 34028)	34028-0007	2
STEP,FR,RH,P.SILVER (Ref # 34028A)	34028-0112-458	1
STEP,FR,LH,P.SILVER (Ref # 34028B)	34028-0115-458	1
PIN,10X35 (Ref # 92043)	92043-0744	2
PIN,COTTER,2.5X18 (Ref # 92043A)	92043-0771	2
PIN,8X31 (Ref # 92043B)	92043-080	2
SPRING,STEP,LH (Ref # 92081)	92081-1606	1
SPRING,STEP,RH (Ref # 92081A)	92081-1607	1
BOLT,FLANGED,6X20 (Ref # 92150)	92150-1339	2
COLLAR (Ref # 92152)	92152-0933	2
BOLT,SOCKET,8X30 (Ref # 92153)	92153-1624	4
BOLT,SOCKET,10X20 (Ref # 92154)	92154-1180	4
DAMPER,STEP (Ref # 92161)	92161-0848	2
DAMPER,REAR STEP (Ref # 92161A)	92161-0866	2
WASHER,20X30X4.5 (Ref # 92200)	92200-0869	2
WASHER,10.5X20X1.0 (Ref # 92200A)	92200-0870	2
PIN-COTTER,2.0X18 (Ref # 550)	550AA2018	2

© 2025 Kawasaki Motors Corp., U.S.A.