2014 NINJA® 300 SE PARTS DIAGRAM

Seat

F2510

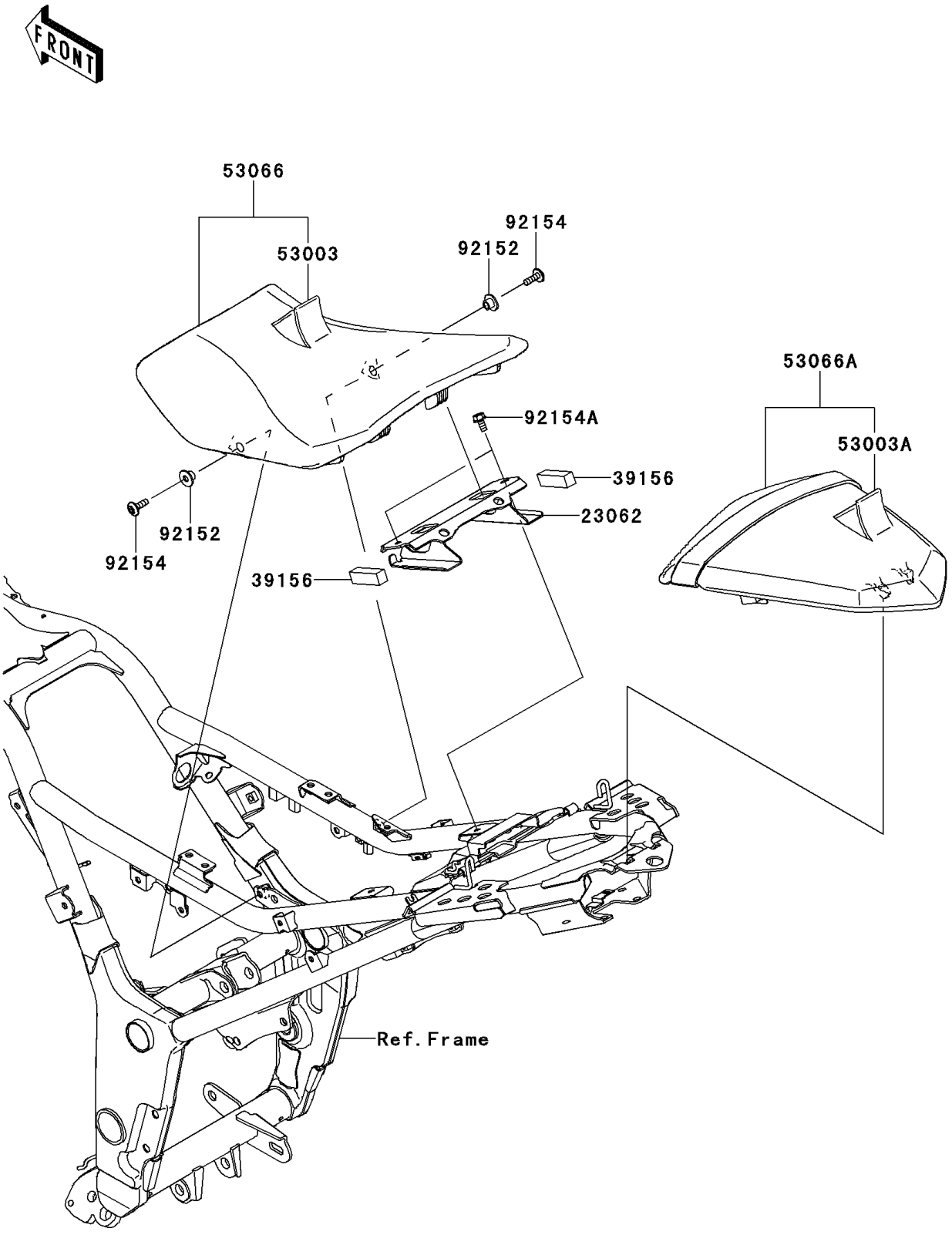

© 2024 Kawasaki Motors Corp., U.S.A.

2014 NINJA® 300 SE PARTS LIST

Seat

ITEM NAME	PART NUMBER	QUANTITY
BRACKET-COMP,SEAT (Ref # 23062)	23062-0782	1
PAD,13X43X12 (Ref # 39156)	39156-0978	2
LEATHER,BLACK (Ref # 53003)	53003-0326-MA	1
LEATHER,BLACK (Ref # 53003A)	53003-0327-MA	1
SEAT-ASSY,FR,BLACK (Ref # 53066)	53066-0392-MA	1
SEAT,RR,LEATHER BLK+BAND BLK (Ref # 53066A)	53066-0393-12Y	1
COLLAR (Ref # 92152)	92152-0295	2
BOLT,SOCKET,6X18 (Ref # 92154)	92154-1026	2
BOLT,FLANGED,6X12 (Ref # 92154A)	92154-1050	2

© 2024 Kawasaki Motors Corp., U.S.A.