2013 NINJA® 1000 PARTS DIAGRAM

Generator

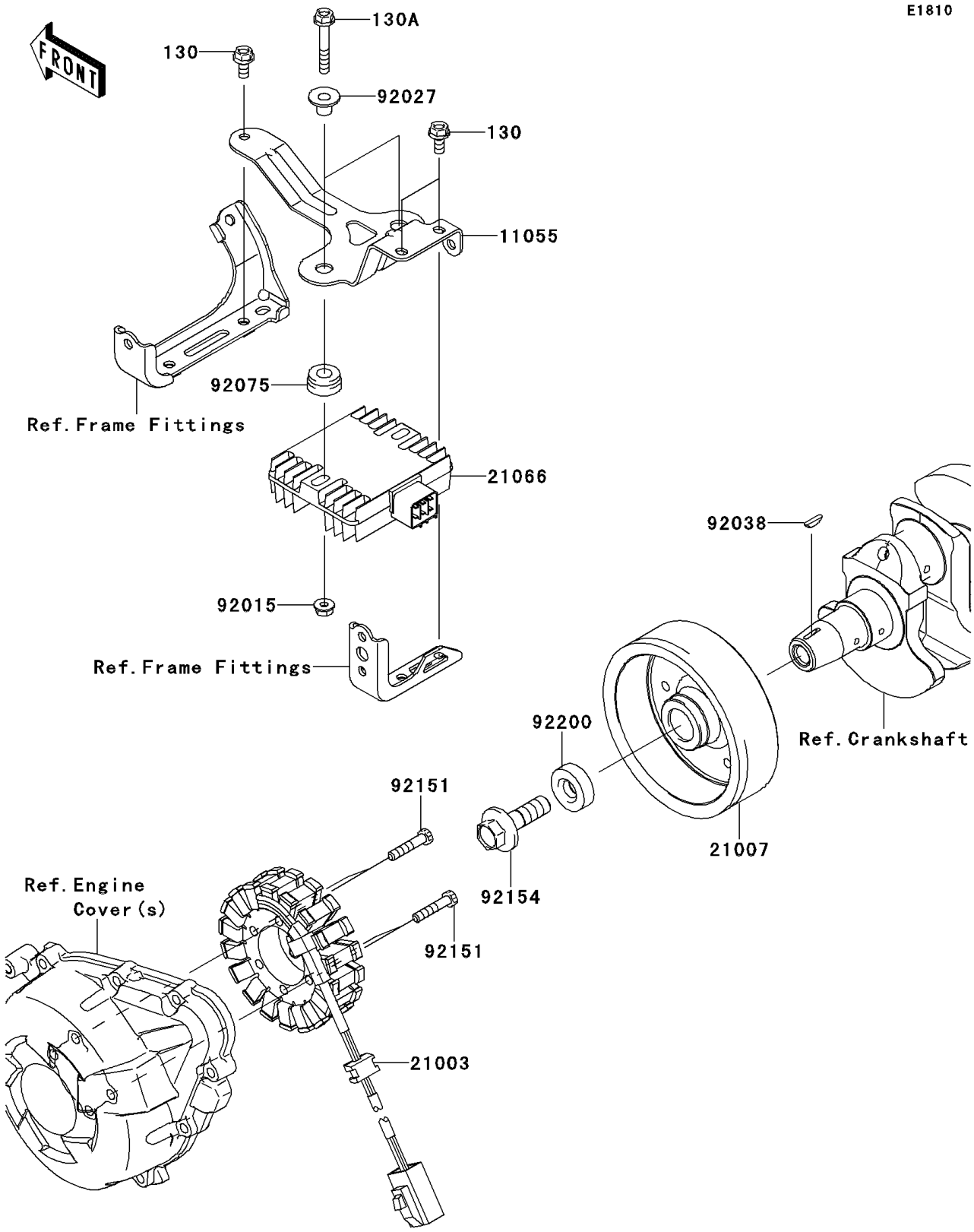

© 2024 Kawasaki Motors Corp., U.S.A.

2013 NINJA® 1000 PARTS LIST

Generator

ITEM NAME	PART NUMBER	QUANTITY
BRACKET,REGULATOR (Ref # 11055)	11055-1788	1
STATOR (Ref # 21003)	21003-0096	1
ROTOR (Ref # 21007)	21007-0135	1
REGULATOR-VOLTAGE (Ref # 21066)	21066-0705	1
NUT,FLANGED,6MM,BLACK (Ref # 92015)	92015-1233	2
COLLAR,FLANGED,L=12.1,BLACK (Ref # 92027)	92027-1651	2
KEY (Ref # 92038)	92038-1060	1
DAMPER (Ref # 92075)	92075-277	2
BOLT,6X30 (Ref # 92151)	92151-1626	4
BOLT,FLANGED,12X40 (Ref # 92154)	92154-0347	1
WASHER,12X34X9 (Ref # 92200)	92200-0369	1
BOLT-FLANGED,6X14 (Ref # 130)	130BA0614	3
BOLT-FLANGED,6X40 (Ref # 130A)	130BA0640	2

© 2024 Kawasaki Motors Corp., U.S.A.