2016 MULE™ 610 4x4 PARTS DIAGRAM

Front Brake Piping

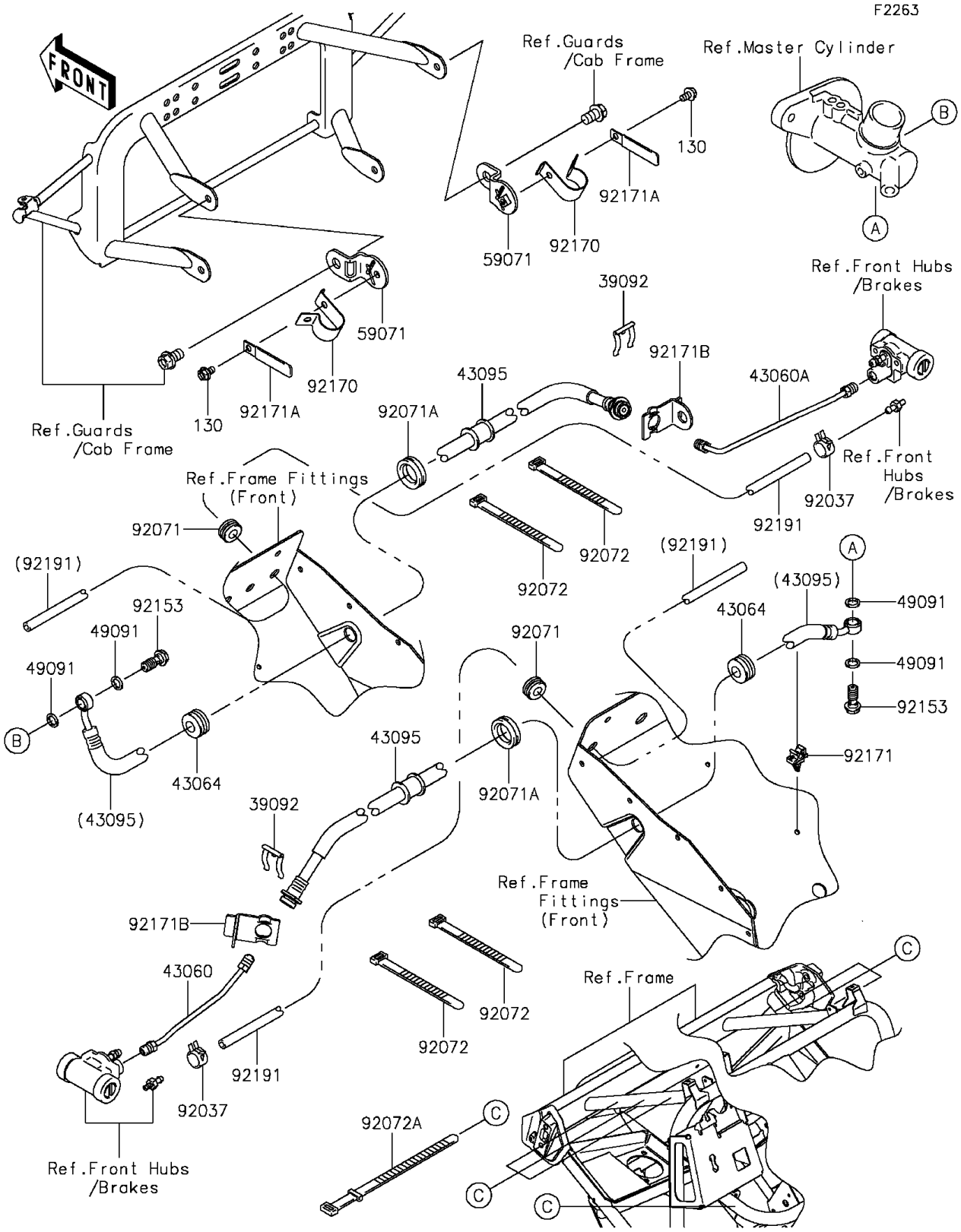

© 2025 Kawasaki Motors Corp., U.S.A.

2016 MULE™ 610 4x4 PARTS LIST

Front Brake Piping

ITEM NAME	PART NUMBER	QUANTITY
PIN-HAIR (Ref # 39092)	39092-1052	2
PIPE-BRAKE,FR,LH (Ref # 43060)	43060-0001	1
PIPE-BRAKE,FR,RH (Ref # 43060A)	43060-0002	1
GROMMET,HOSE CLAMP (Ref # 43064)	43064-007	2
HOSE-BRAKE,FR (Ref # 43095)	43095-0055	2
WASHER-SEAL,10.1X14.5X1.5 (Ref # 49091)	49091-0001	4
JOINT (Ref # 59071)	59071-0024	2
CLAMP (Ref # 92037)	92037-1601	2
GROMMET (Ref # 92071)	92071-1010	2
GROMMET (Ref # 92071A)	92071-3704	2
BAND,L=123 (Ref # 92072)	92072-030	4
BAND,L=186 (Ref # 92072A)	92072-056	7
BOLT,OIL,L=23 (Ref # 92153)	92153-0627	2
CLAMP,HOSE (Ref # 92170)	92170-1173	2
CLAMP (Ref # 92171)	92171-0339	1
CLAMP,L=60 (Ref # 92171A)	92171-0652	2
CLAMP (Ref # 92171B)	92171-1654	2
TUBE,4.7X9.5X1480 (Ref # 92191)	92191-1615	2
BOLT-FLANGED,6X10 (Ref # 130)	130AA0610	2

© 2025 Kawasaki Motors Corp., U.S.A.