2014 MULE™ 600 PARTS DIAGRAM

Chassis Electrical Equipment

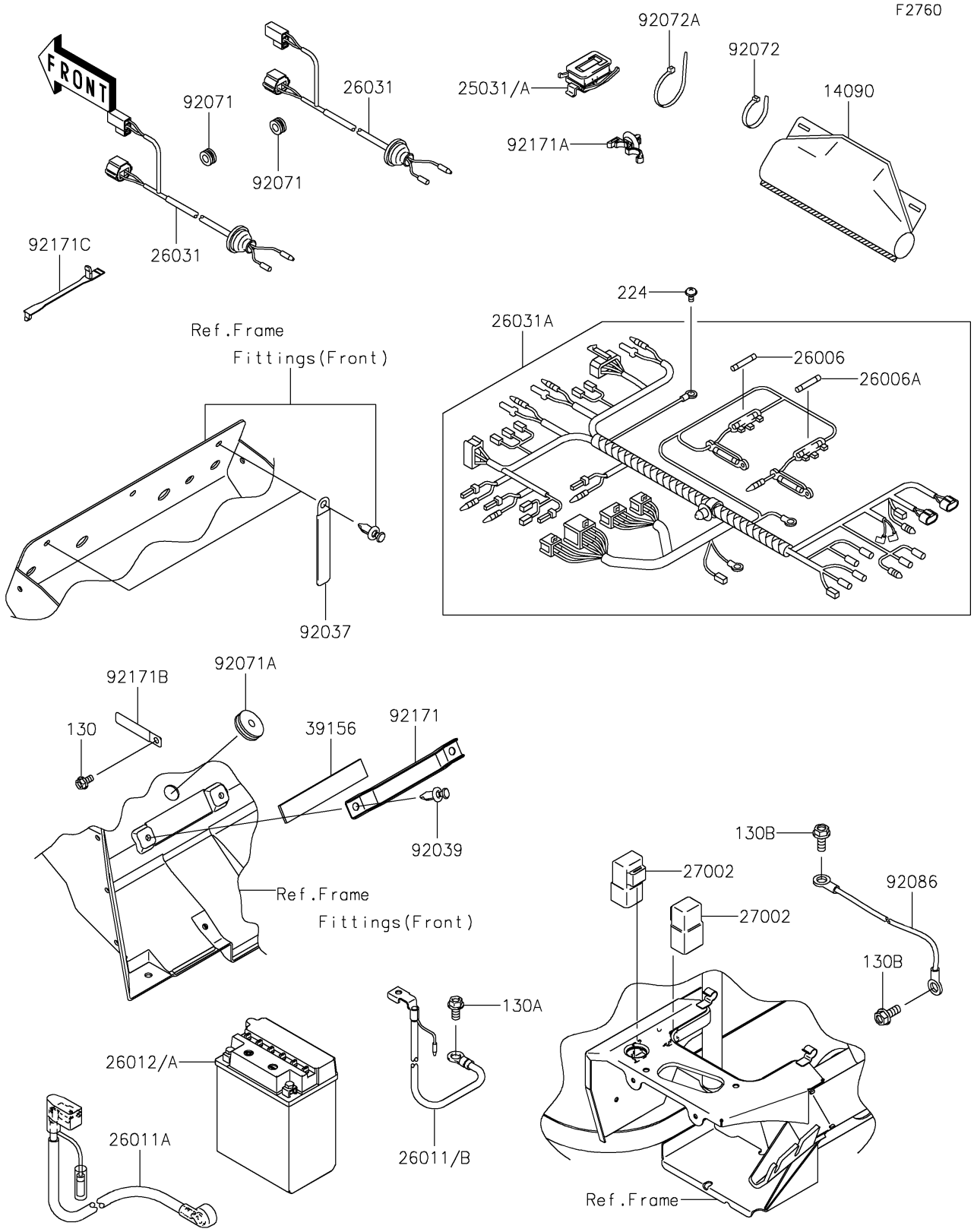

© 2024 Kawasaki Motors Corp., U.S.A.

2014 MULE™ 600 PARTS LIST

Chassis Electrical Equipment

ITEM NAME	PART NUMBER	QUANTITY

© 2024 Kawasaki Motors Corp., U.S.A.