2011 MULE™ 600 PARTS DIAGRAM

Wheels/Tires

F2210

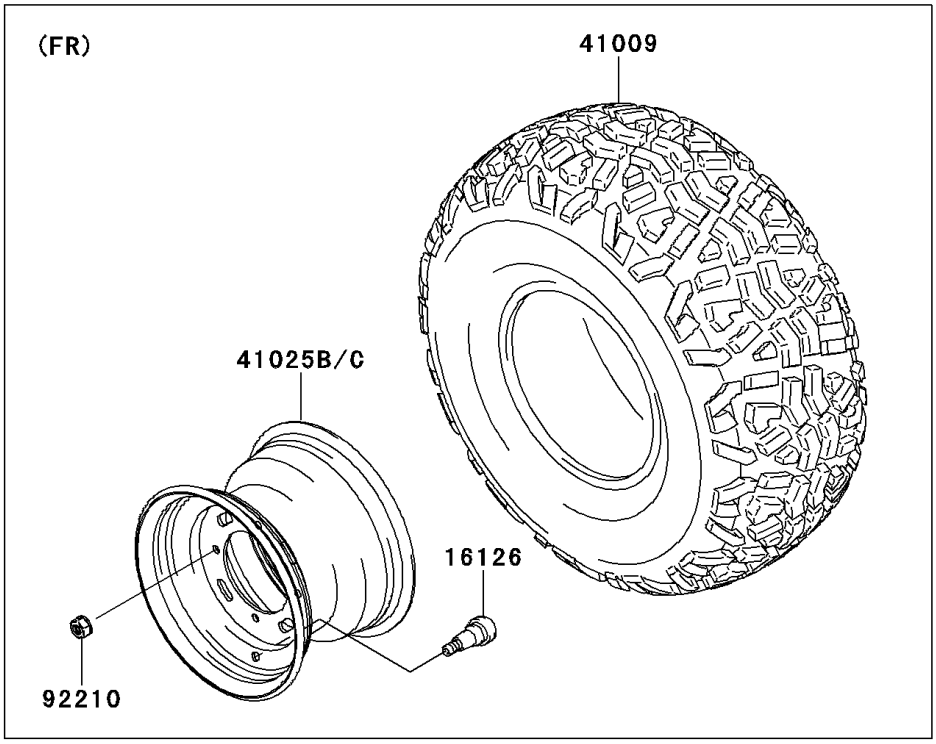

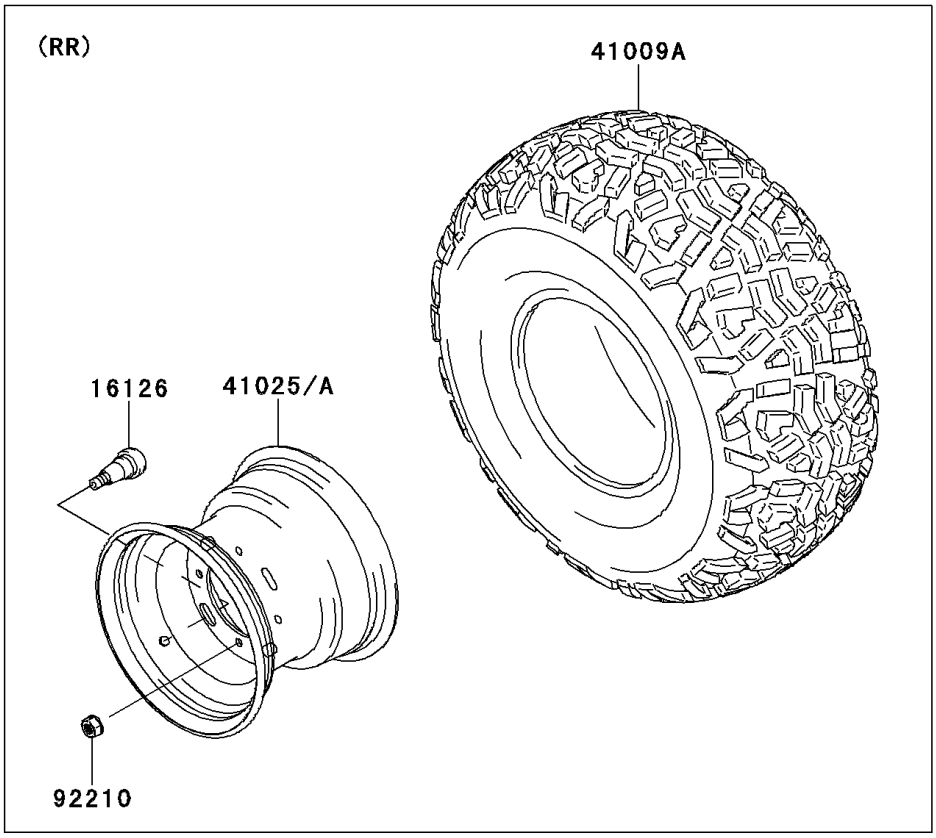

© 2024 Kawasaki Motors Corp., U.S.A.

2011 MULE™ 600 PARTS LIST

Wheels/Tires

ITEM NAME	PART NUMBER	QUANTITY
VALVE (Ref # 16126)	16126-4001	4
TIRE,FR,22X9.00-10 4PR,K109 (Ref # 41009)	41009-0292	2
TIRE,RR,22X11.00-10 (Ref # 41009A)	41009-0293	2
RIM,RR,10X8.5,SILVER (Ref # 41025)	41025-0039-16H	2
RIM,FR,10X7.0 AT,SILVER (Ref # 41025B)	41025-0040-16H	2
NUT,LOCK,10MM (Ref # 92210)	92210-1204	16

© 2024 Kawasaki Motors Corp., U.S.A.