2014 MULE™ 610 4x4 PARTS DIAGRAM

Wheels/Tires

F2210

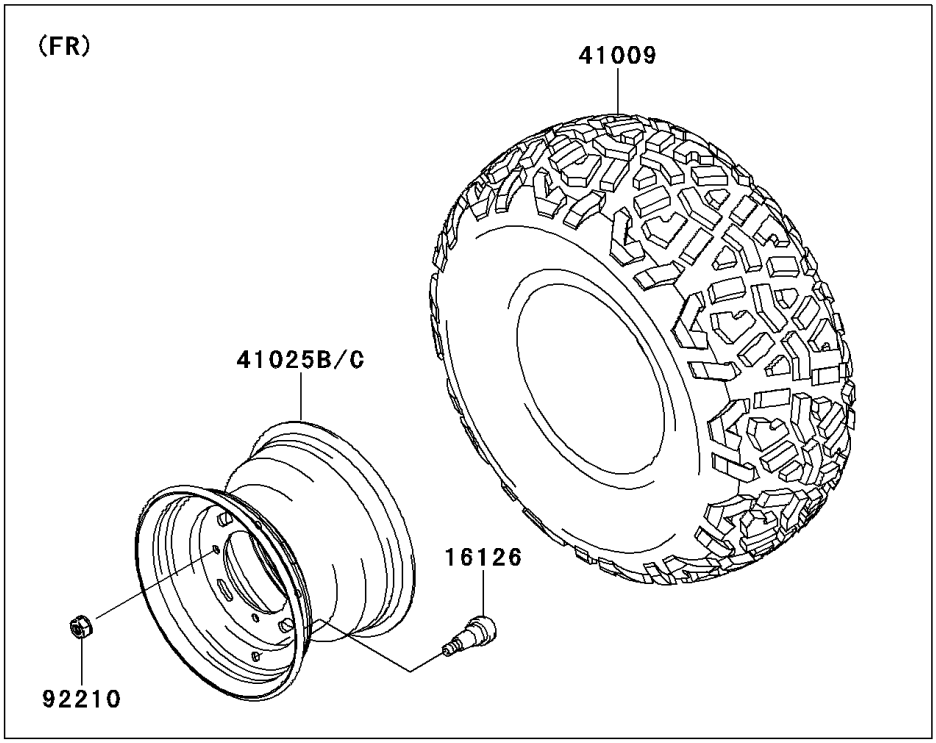

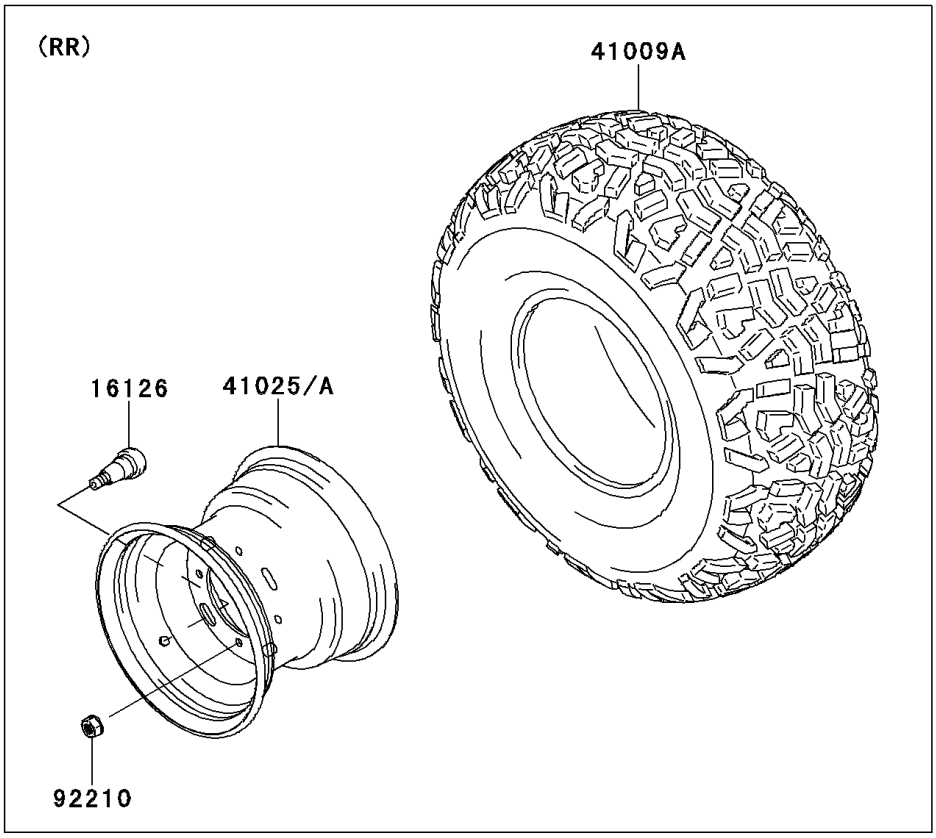

© 2024 Kawasaki Motors Corp., U.S.A.

2014 MULE™ 610 4x4 PARTS LIST

Wheels/Tires

ITEM NAME	PART NUMBER	QUANTITY
VALVE (Ref # 16126)	16126-4001	4
TIRE,FR,24X9.00-10 4PR (Ref # 41009)	41009-0290	2
TIRE,RR,24X11.00-10 4PR (Ref # 41009A)	41009-0291	2
RIM,RR,10X8.5,F.S.BLACK (Ref # 41025A)	41025-0039-397	2
RIM,FR,10X7.0 AT,F.S.BLACK (Ref # 41025C)	41025-0040-397	2
NUT,LOCK,10MM (Ref # 92210)	92210-1204	16

© 2024 Kawasaki Motors Corp., U.S.A.