2012 MULE™ 610 4x4

PARTS DIAGRAM

Cooling

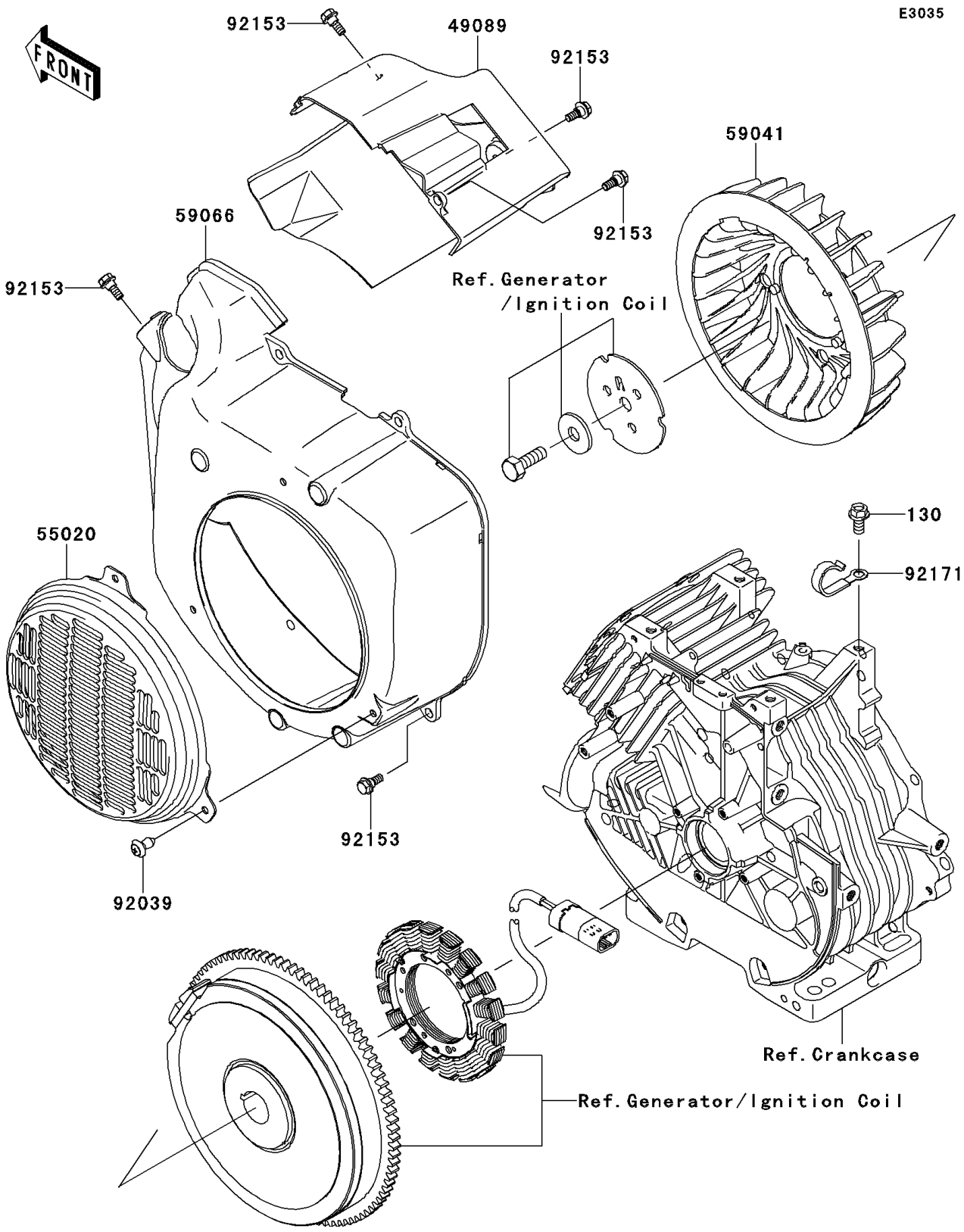

© 2026 Kawasaki Motors Corp., U.S.A.

2012 MULE™ 610 4x4

PARTS LIST

Cooling

ITEM NAME	PART NUMBER	QUANTITY
SHROUD-ENGINE (Ref # 49089)	49089-7089	1
GUARD (Ref # 55020)	55020-7008	1
FAN (Ref # 59041)	59041-0007	1
HOUSING-FAN (Ref # 59066)	59066-7059	1
RIVET,GUARD (Ref # 92039)	92039-7004	3
BOLT,FLANGED,6X16 (Ref # 92153)	92153-7007	8
CLAMP (Ref # 92171)	92171-7005	1
BOLT-FLANGED,8X16 (Ref # 130)	130AA0816	1

© 2026 Kawasaki Motors Corp., U.S.A.