2022 MULE SX™ 4x4 XC FI PARTS DIAGRAM

Optional Parts(Frame)

F2890A

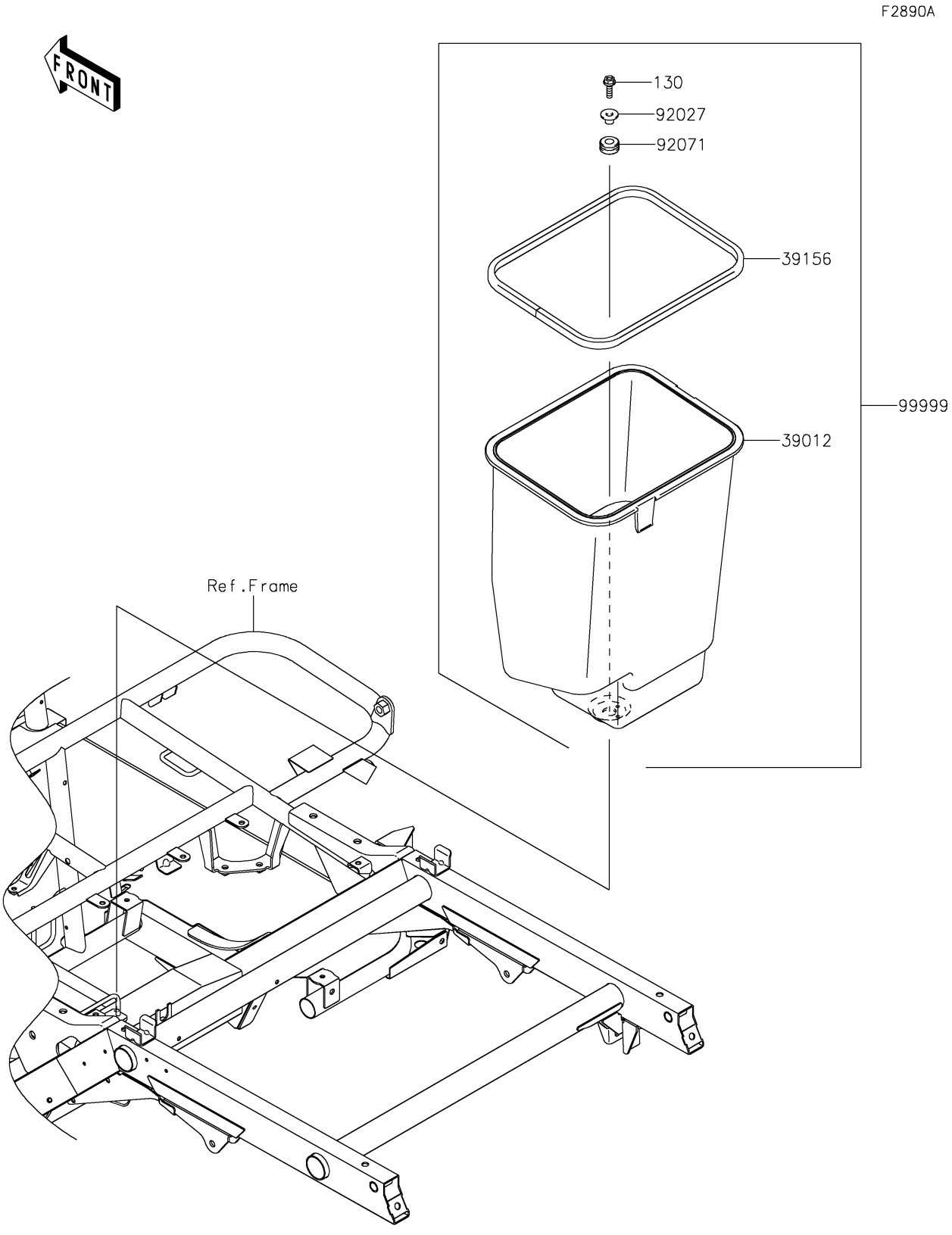

© 2024 Kawasaki Motors Corp., U.S.A.

2022 MULE SX™ 4x4 XC FI PARTS LIST

Optional Parts(Frame)

ITEM NAME	PART NUMBER	QUANTITY
CASE-STORAGE (Ref # 39012)	39012-0006	1
PAD,STORAGE CASE (Ref # 39156)	39156-0052	1
COLLAR (Ref # 92027)	92027-1767	1
GROMMET (Ref # 92071)	92071-1010	1
KIT.,STORAGE BOX (Ref # 99999)	99999-0054	1
BOLT-FLANGED,6X20 (Ref # 130)	130BB0620	1

© 2024 Kawasaki Motors Corp., U.S.A.