2019 MULE SX™ 4x4 XC LE FI PARTS DIAGRAM

Sun Top

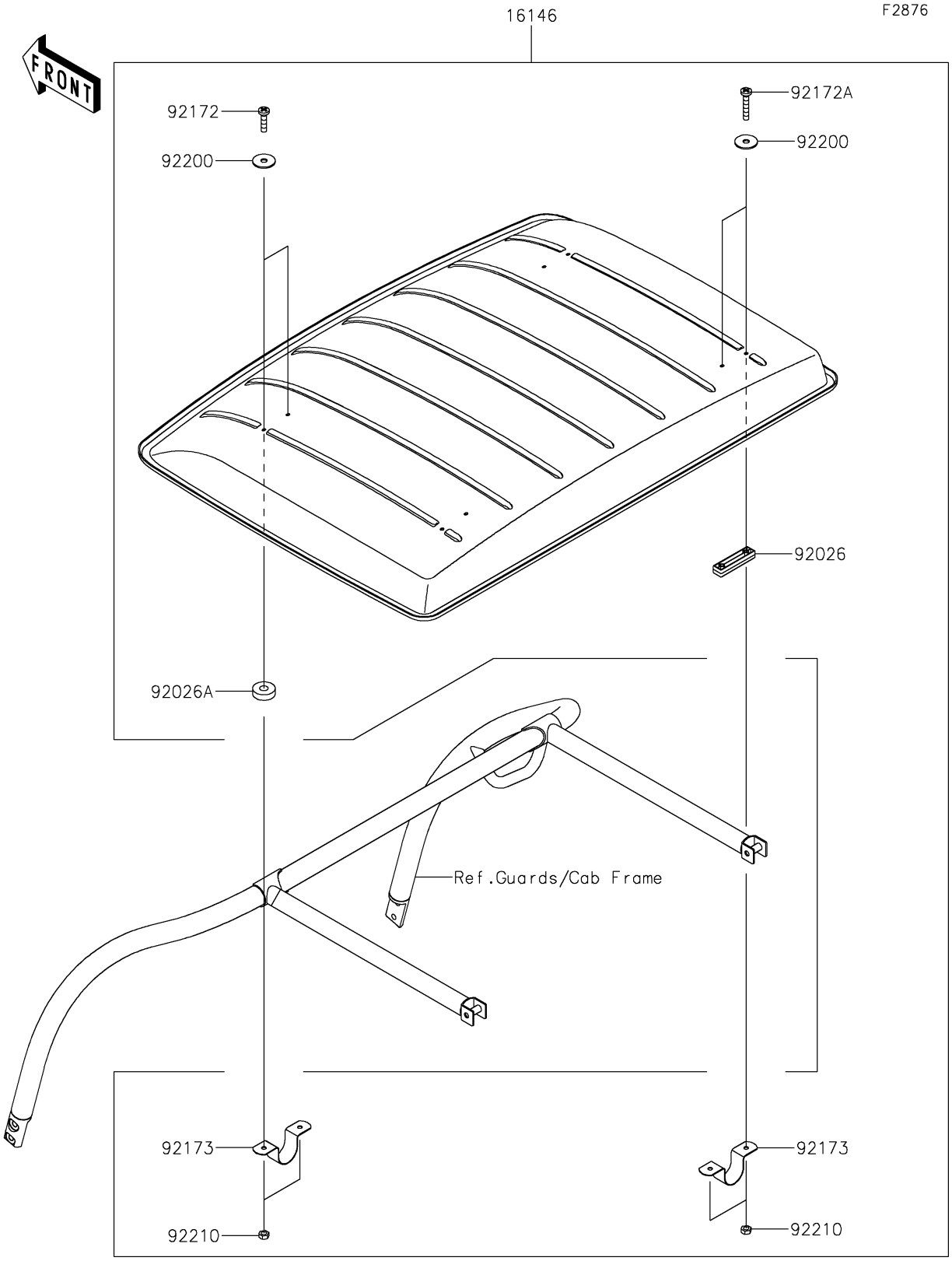

© 2024 Kawasaki Motors Corp., U.S.A.

2019 MULE SX™ 4x4 XC LE FI PARTS LIST

Sun Top

ITEM NAME	PART NUMBER	QUANTITY
COVER-ASSY,SUN TOP (Ref # 16146)	16146-0742	1
SPACER,BLOCK (Ref # 92026)	92026-0763	2
SPACER,9.5X25.4X7.5 (Ref # 92026A)	92026-0764	4
SCREW,6X25.4 (Ref # 92172)	92172-0873	4
SCREW,6X35.1 (Ref # 92172A)	92172-0874	4
CLAMP (Ref # 92173)	92173-1200	4
WASHER,7.1X25.4X1.6 (Ref # 92200)	92200-0912	8
NUT,6MM (Ref # 92210)	92210-0886	8

© 2024 Kawasaki Motors Corp., U.S.A.