2020 MULE SX™ 4x4 XC LE FI PARTS DIAGRAM

Frame Fittings(Rear)

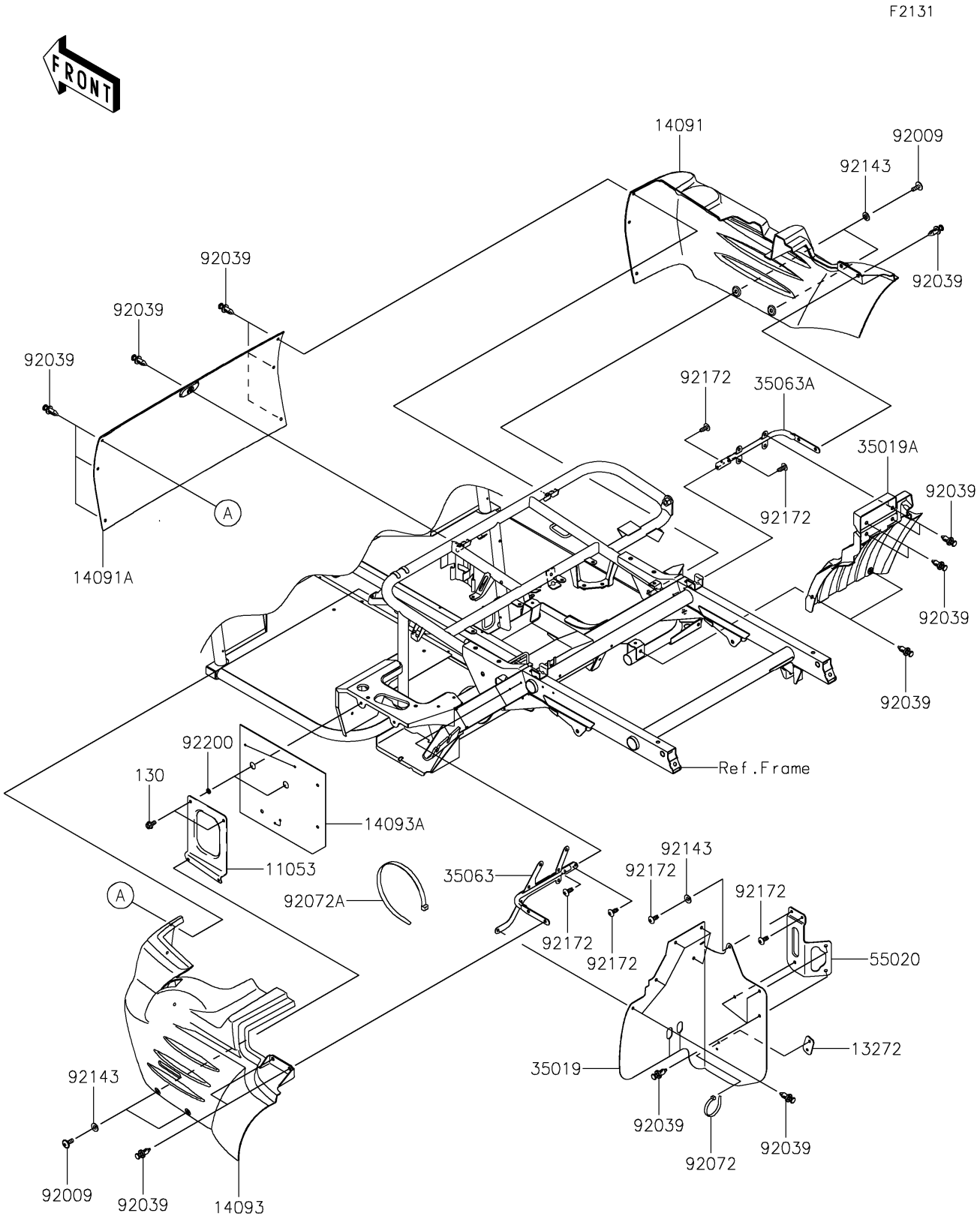

© 2024 Kawasaki Motors Corp., U.S.A.

2020 MULE SX™ 4x4 XC LE FI PARTS LIST

Frame Fittings(Rear)

ITEM NAME	PART NUMBER	QUANTITY

© 2024 Kawasaki Motors Corp., U.S.A.