# 2019 MULE SX™ 4x4 XC CAMO FI PARTS DIAGRAM

## Front Brake Piping

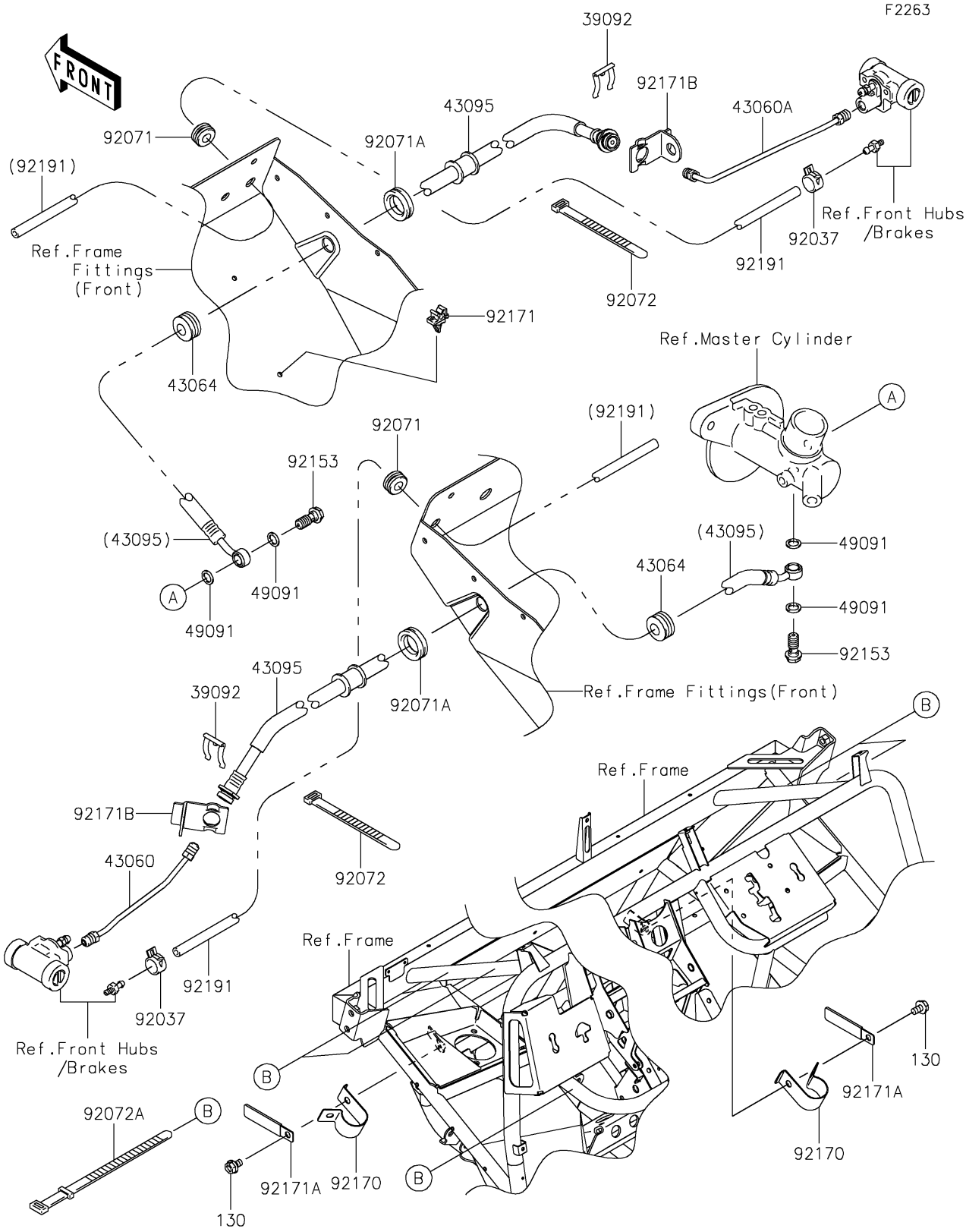


© 2024 Kawasaki Motors Corp., U.S.A.

# 2019 MULE SX™ 4x4 XC CAMO FI PARTS LIST

## Front Brake Piping

| ITEM NAME | PART NUMBER | QUANTITY |
|---|---|---|

© 2024 Kawasaki Motors Corp., U.S.A.