2018 MULE SX™ 4x4 XC PARTS DIAGRAM

Ignition Switch

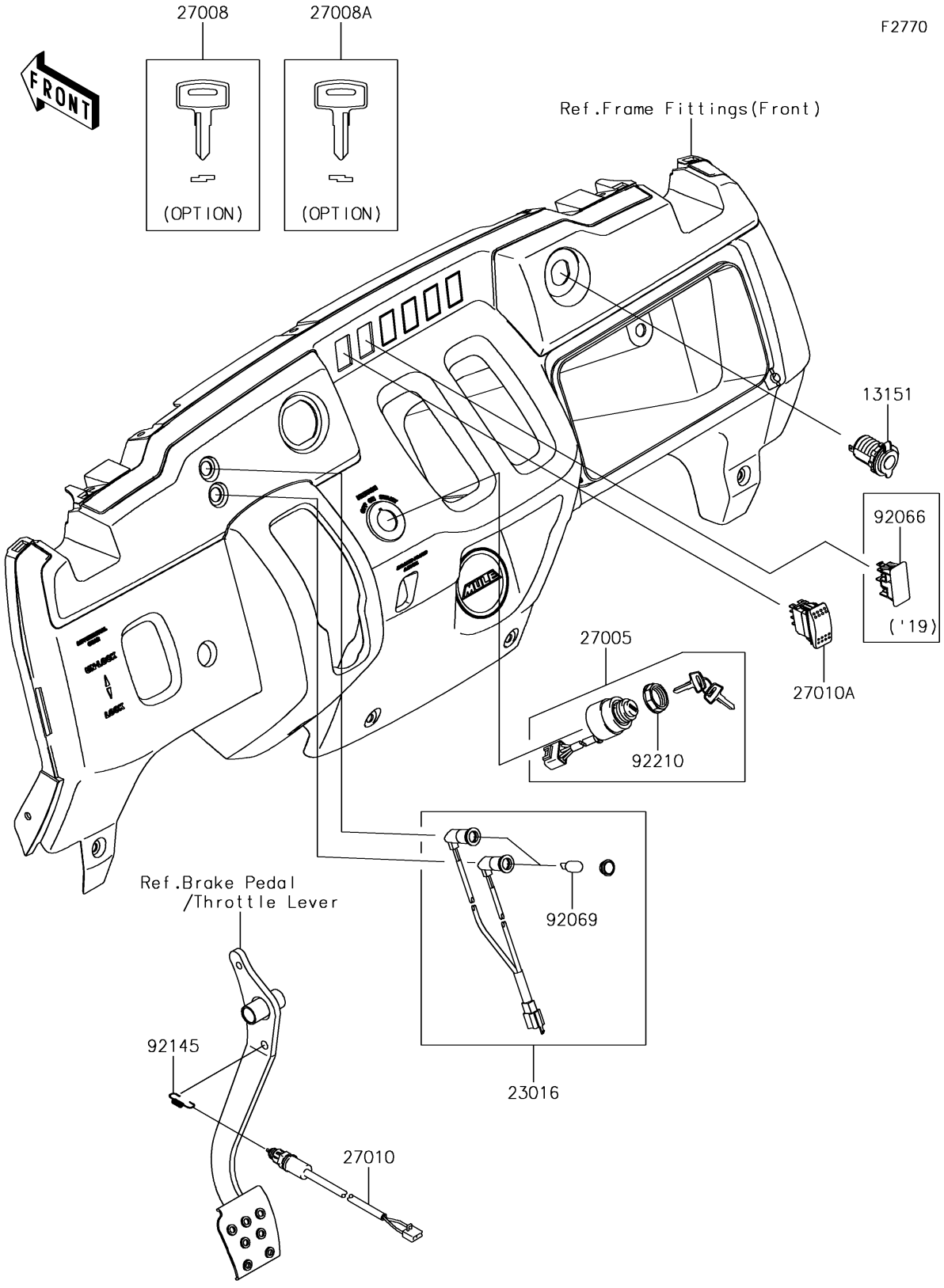

© 2024 Kawasaki Motors Corp., U.S.A.

2018 MULE SX™ 4x4 XC PARTS LIST

Ignition Switch

ITEM NAME	PART NUMBER	QUANTITY
SWITCH-COMP,OUTLET,12V (Ref # 13151)	13151-0556	1
LAMP-ASSY,PARKING&OIL TEMP (Ref # 23016)	23016-0590	1
SWITCH-ASSY-IGNITION (Ref # 27005)	27005-1146	1
KEY-LOCK,BLANK (Ref # 27008)	27008-1153	1
KEY-LOCK,BLANK (Ref # 27008A)	27008-1157	1
SWITCH,BRAKE (Ref # 27010)	27010-0724	1
SWITCH,OUTER (Ref # 27010A)	27010-0806	1
BULB,12V 1.7W,T10 (Ref # 92069)	92069-1059	2
SPRING,REAR BRAKE SWITCH (Ref # 92145)	92145-7508	1
NUT,IGNITION SWITCH (Ref # 92210)	92210-1264	1

© 2024 Kawasaki Motors Corp., U.S.A.