# 2017 MULE SX™ 4x4 XC PARTS DIAGRAM

Carrier(s)(-JK1AFEK1 KB505805)

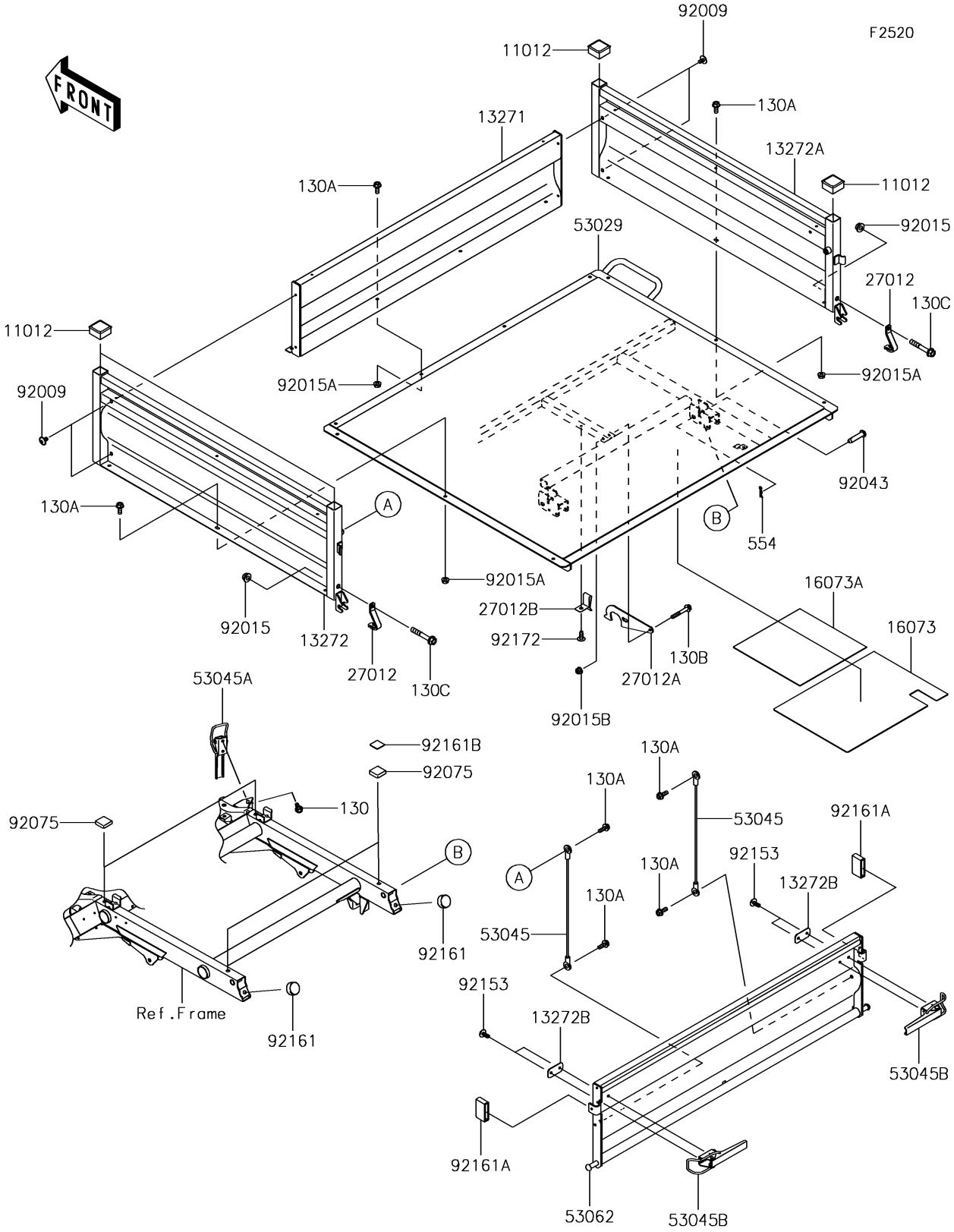


© 2024 Kawasaki Motors Corp., U.S.A.

# 2017 MULE SX™ 4x4 XC PARTS LIST

Carrier(s)(-JK1AFEK1 KB505805)

| ITEM NAME | PART NUMBER | QUANTITY |
|---|---|---|
| CAP (Ref # 11012) | 11012-1784 | 4 |
| PLATE,CARRIER,SIDE,FR,V.BLUE (Ref # 13271) | 13271-0385-57G | 1 |
| PLATE,SIDE CARRIER,LH,V.BLUE (Ref # 13272) | 13272-2098-57G | 1 |
| PLATE,SIDE CARRIER,RH,V.BLUE (Ref # 13272A) | 13272-2099-57G | 1 |
| PLATE (Ref # 13272B) | 13272-7516 | 2 |
| INSULATOR,295X400 (Ref # 16073) | 16073-0849 | 1 |
| INSULATOR,265X265 (Ref # 16073A) | 16073-0850 | 1 |
| HOOK,TAIL GATE (Ref # 27012) | 27012-0022 | 2 |
| HOOK (Ref # 27012A) | 27012-0044 | 1 |
| HOOK,CARRIER (Ref # 27012B) | 27012-1445 | 1 |
| CARRIER,BASE,T.BLACK (Ref # 53029) | 53029-0345-388 | 1 |
| HOOK-ASSY,CABLE (Ref # 53045) | 53045-0030 | 2 |
| HOOK-ASSY (Ref # 53045A) | 53045-0032 | 1 |
| HOOK-ASSY (Ref # 53045B) | 53045-0033 | 2 |
| GATE-TAIL,V.BLUE (Ref # 53062) | 53062-0024-57G | 1 |
| SCREW,6X10 (Ref # 92009) | 92009-1661 | 4 |
| NUT,FLANGED,8MM (Ref # 92015) | 92015-1014 | 2 |
| NUT,FLANGED,6MM (Ref # 92015A) | 92015-1367 | 10 |
| NUT,LOCK,FLANGED,6MM (Ref # 92015B) | 92015-1675 | 1 |
| PIN,12X54 (Ref # 92043) | 92043-1451 | 2 |
| DAMPER (Ref # 92075) | 92075-1882 | 4 |
| BOLT,SOCKET,6X14 (Ref # 92153) | 92153-1021 | 4 |
| DAMPER,SEAT (Ref # 92161) | 92161-1065 | 2 |
| DAMPER (Ref # 92161A) | 92161-7519 | 2 |
| DAMPER (Ref # 92161B) | 92161-7520 | 2 |
| SCREW,TAPPING,6X16 (Ref # 92172) | 92172-0739 | 1 |
| BOLT-FLANGED,6X14 (Ref # 130) | 130BA0614 | 2 |
| BOLT-FLANGED,6X16 (Ref # 130A) | 130BA0616 | 14 |
| BOLT-FLANGED,6X40 (Ref # 130B) | 130BA0640 | 1 |

© 2024 Kawasaki Motors Corp., U.S.A.

# 2017 MULE SX™ 4x4 XC PARTS LIST

Carrier(s)(-JK1AFEK1 KB505805)

| ITEM NAME | PART NUMBER | QUANTITY |
|---|---|---|
| BOLT-FLANGED,8X50 (Ref # 130C) | 130BA0850 | 2 |
| PIN-SNAP,12MM (Ref # 554) | 554DA1200 | 2 |

© 2024 Kawasaki Motors Corp., U.S.A.