2017 MULE SX™ 4x4 XC PARTS DIAGRAM

Swingarm

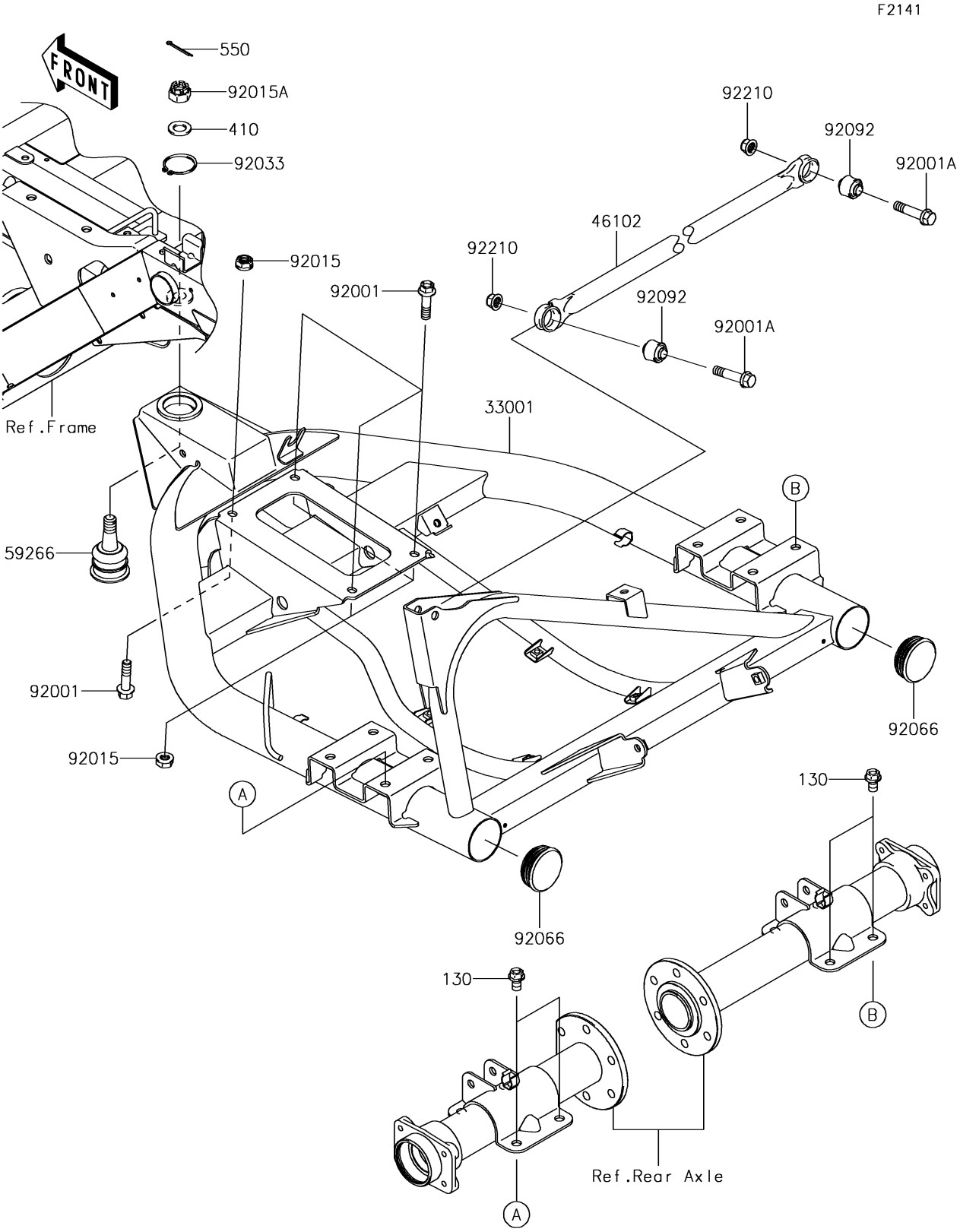

© 2024 Kawasaki Motors Corp., U.S.A.

2017 MULE SX™ 4x4 XC PARTS LIST

Swingarm

ITEM NAME	PART NUMBER	QUANTITY
ARM-COMP-SWING (Ref # 33001)	33001-0061	1
ROD (Ref # 46102)	46102-0583	1
JOINT-BALL (Ref # 59266)	59266-1087	1
BOLT,FLANGED,10X38 (Ref # 92001)	92001-1293	4
BOLT,FLANGED,10X44 (Ref # 92001A)	92001-1499	2
NUT,LOCK,FLANGED,10MM (Ref # 92015)	92015-1717	4
NUT,CASTLE,14MM (Ref # 92015A)	92015-1841	1
RING-SNAP (Ref # 92033)	92033-0050	1
PLUG (Ref # 92066)	92066-0044	2
BUSHING-RUBBER (Ref # 92092)	92092-7502	2
NUT,LOCK,FLANGED,10MM (Ref # 92210)	92210-0276	2
BOLT-FLANGED,10X16 (Ref # 130)	130BA1016	8
WASHER-PLAIN-SMALL,14MM (Ref # 410)	410AA1400	1
PIN-COTTER,3.2X30 (Ref # 550)	550AA3230	1

© 2024 Kawasaki Motors Corp., U.S.A.