2018 MULE SX™ PARTS DIAGRAM

Reflectors

F2790

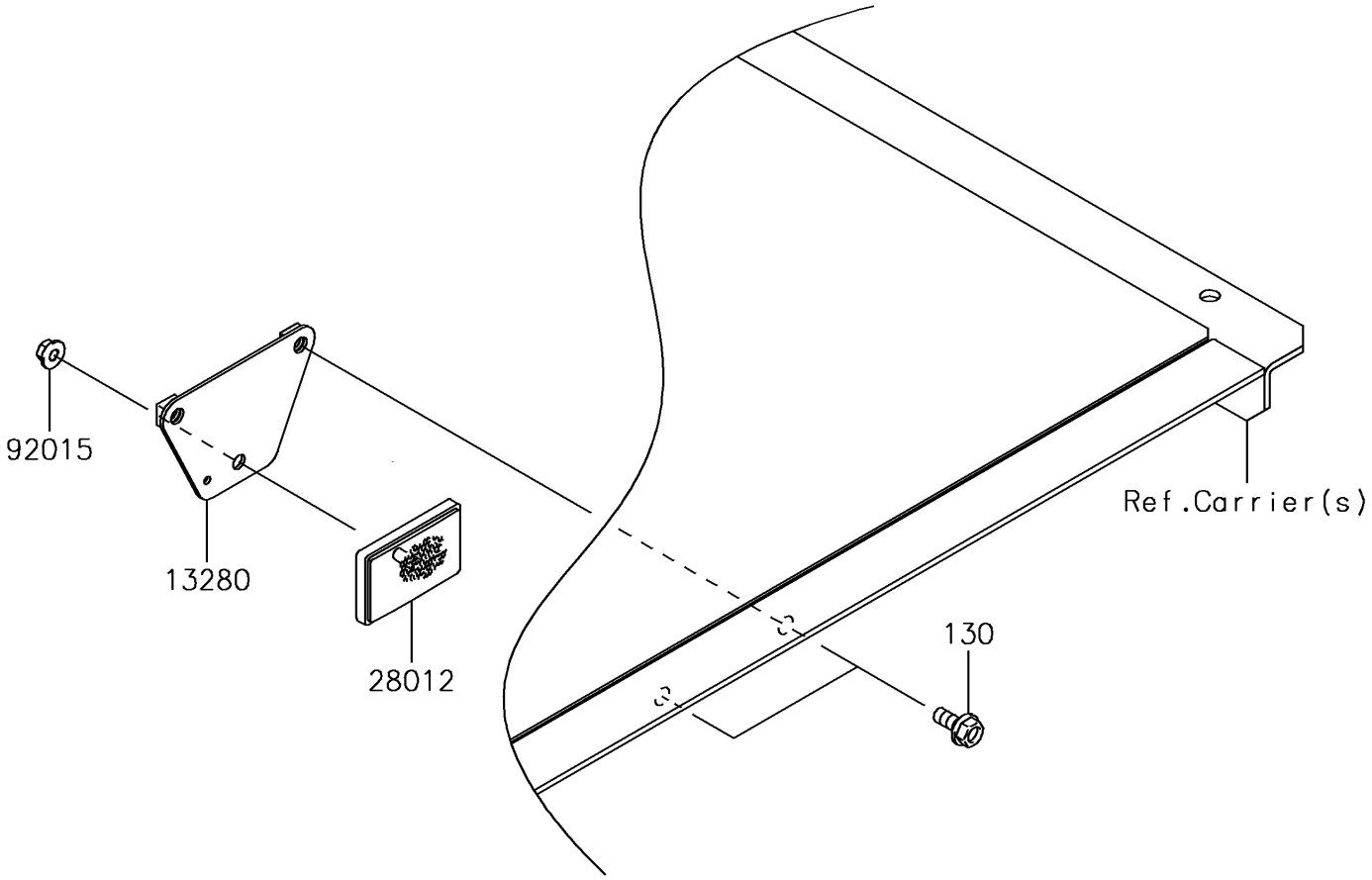

© 2024 Kawasaki Motors Corp., U.S.A.

2018 MULE SX™ PARTS LIST

Reflectors

ITEM NAME	PART NUMBER	QUANTITY
HOLDER,REFLECTOR (Ref # 13280)	13280-0146	1
REFLECTOR-REFLEX (Ref # 28012)	28012-1088	1
NUT,FLANGED,5MM (Ref # 92015)	92015-1259	1
BOLT-FLANGED,6X14 (Ref # 130)	130BA0614	2

© 2024 Kawasaki Motors Corp., U.S.A.