2017 Mule SX PARTS DIAGRAM

Differential

E1451

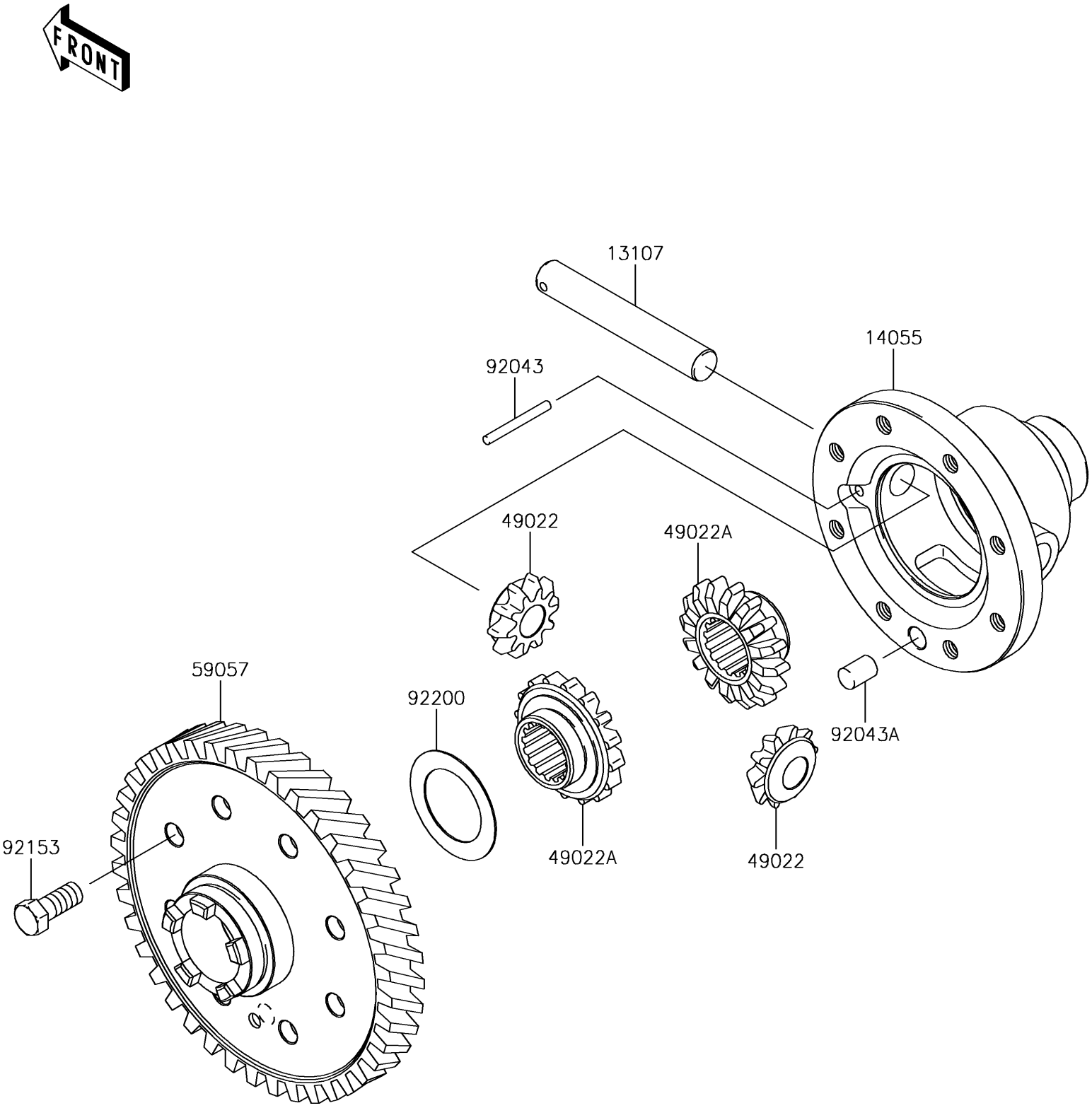

© 2024 Kawasaki Motors Corp., U.S.A.

2017 Mule SX PARTS LIST

Differential

ITEM NAME	PART NUMBER	QUANTITY
SHAFT,DIFF-GEAR CASE (Ref # 13107)	13107-0042	1
CASE-GEAR,DIFF (Ref # 14055)	14055-0016	1
GEAR-BEVEL,10T (Ref # 49022)	49022-0572	2
GEAR-BEVEL,16T (Ref # 49022A)	49022-0573	2
GEAR-HELICAL,64T (Ref # 59057)	59057-0005	1
PIN,4X37.8 (Ref # 92043)	92043-0052	1
PIN,10X14 (Ref # 92043A)	92043-1506	1
BOLT,10X22 (Ref # 92153)	92153-0590	8
WASHER (Ref # 92200)	92200-1077	1

© 2024 Kawasaki Motors Corp., U.S.A.