2021 JET SKI® SX-R™ PARTS DIAGRAM

Labels

F3183

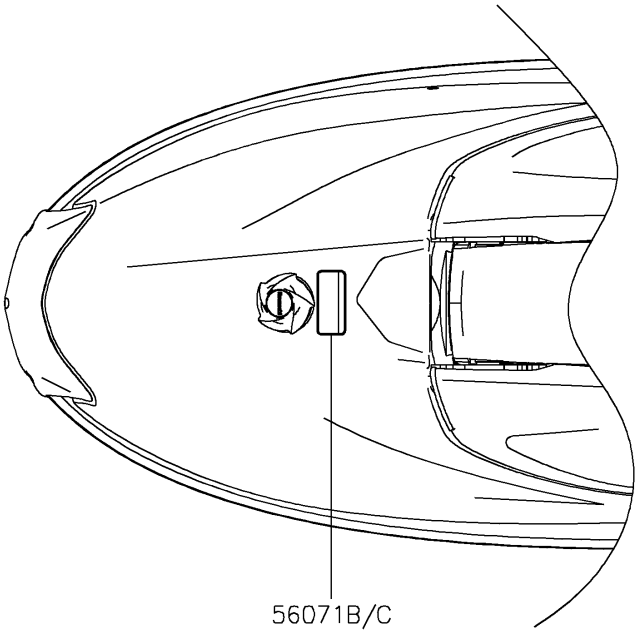

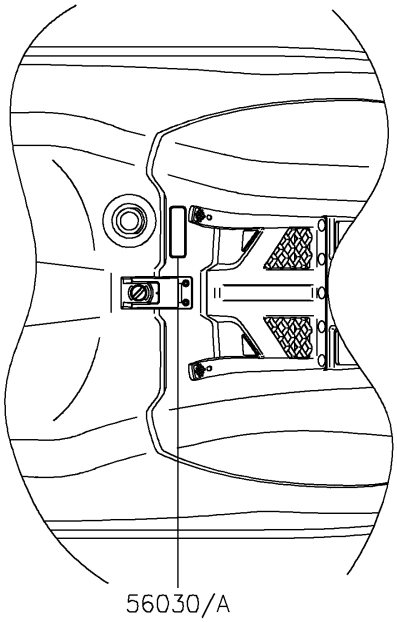

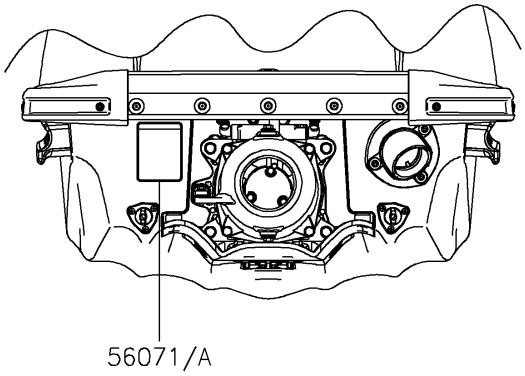

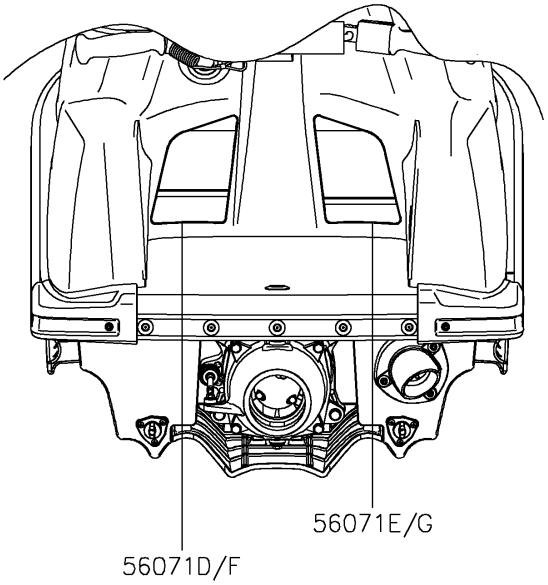

© 2024 Kawasaki Motors Corp., U.S.A.

2021 JET SKI® SX-R™ PARTS LIST

Labels

ITEM NAME	PART NUMBER	QUANTITY
LABEL,FIRE EXTINGUISHER (Ref # 56030)	56030-3755	1
LABEL,FIRE EXTINGUISHER (Ref # 56030A)	56030-3757	1
LABEL-WARNING,RIGHTING (Ref # 56071)	56071-0398	1
LABEL-WARNING,RIGHTING (Ref # 56071A)	56071-0399	1
LABEL-WARNING,FUEL SUPPLY (Ref # 56071B)	56071-0424	1
LABEL-WARNING,FUEL SUPPLY (Ref # 56071C)	56071-0425	1
LABEL-WARNING,IMPORTANT SAFETY (Ref # 56071D)	56071-0868	1
LABEL-WARNING,AVOID COLLISIONS (Ref # 56071E)	56071-0869	1
LABEL-WARNING,IMPORTANT SAFETY (Ref # 56071F)	56071-0871	1
LABEL-WARNING,AVOID COLLISIONS (Ref # 56071G)	56071-0872	1

© 2024 Kawasaki Motors Corp., U.S.A.