1996 Police 1000 PARTS DIAGRAM

Taillight(s)

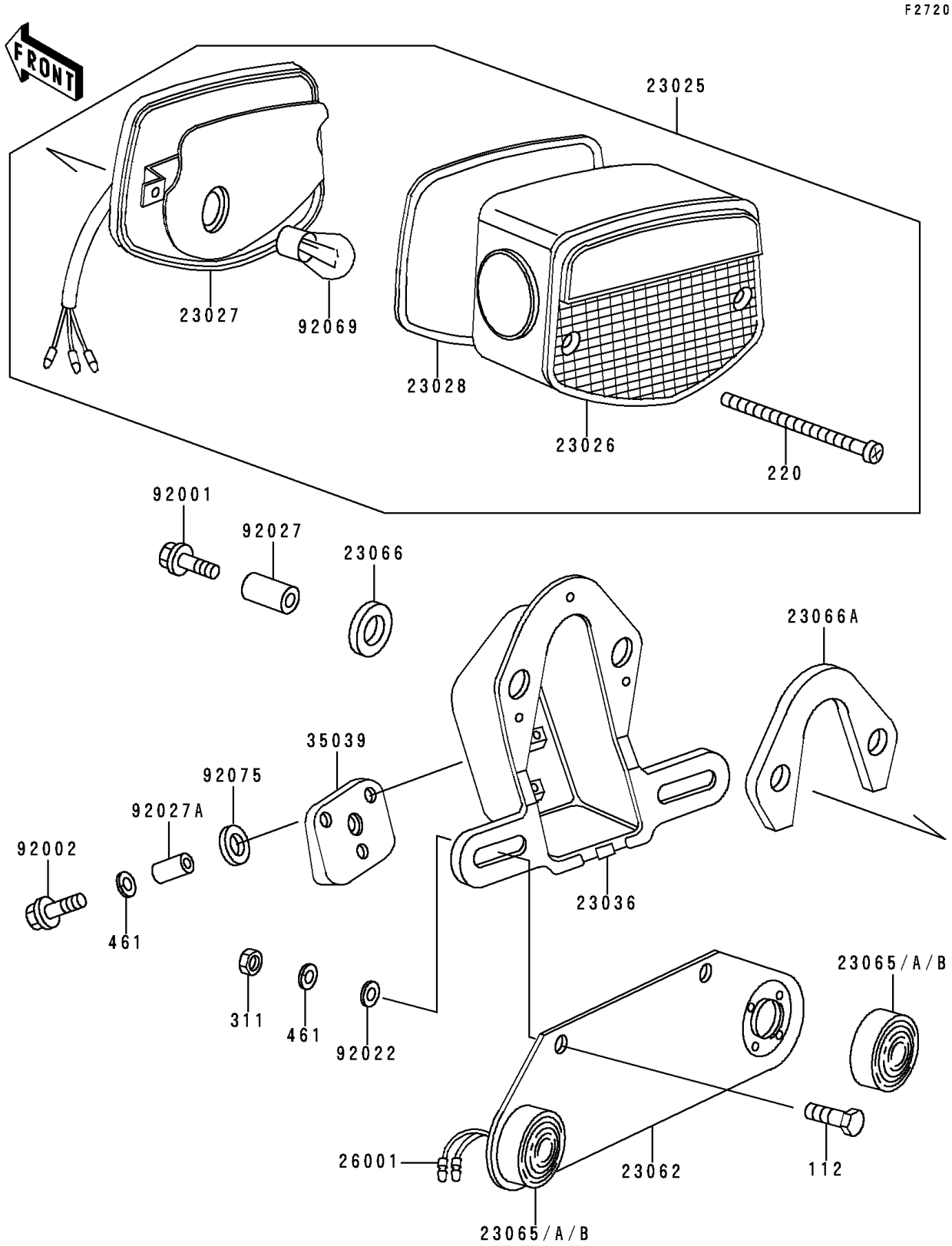

© 2026 Kawasaki Motors Corp., U.S.A.

1996 Police 1000 PARTS LIST

Taillight(s)

ITEM NAME	PART NUMBER	QUANTITY
BOLT-UPSET (Ref # 112)	112B0620	2
SCREW-PAN-CROS (Ref # 220)	220B0460	2
NUT-HEX,6MM (Ref # 311)	311B0600	2
WASHER-SPRING,6MM (Ref # 461)	461F0600	2
LAMP-TAIL,"220-40781"MARK (Ref # 23025)	23025-064	1
LENS,TAIL LAMP (Ref # 23026)	23026-034	1
BODY-COMP-TAIL LAMP (Ref # 23027)	23027-041	1
GASKET,TAIL LAMP LENS (Ref # 23028)	23028-021	1
BRACKET-TAIL LAMP,"220-40810" (Ref # 23036)	23036-052	1
BRACKET-COMP,LICENSE PLATE (Ref # 23062)	23062-1002	1
LAMP-ASSY,ID,BLUE (Ref # 23065)	23065-003	2
LAMP-ASSY,ID,RED (Ref # 23065A)	23065-004	2
LAMP-ASSY,ID,AMBER (Ref # 23065B)	23065-005	2
DAMPER (Ref # 23066)	23066-020	2
DAMPER (Ref # 23066A)	23066-023	1
HARNESS,ID LIGHT (Ref # 26001)	26001-4001	2
DAMPER,TAIL LAMP (Ref # 35039)	35039-004	1
BOLT,6X20 (Ref # 92001)	92001-1773	2
BOLT,6X25 (Ref # 92002)	92002-1137	3
WASHER,7X16X1.2 (Ref # 92022)	92022-024	2
COLLAR,6.8X10X8.5 (Ref # 92027)	92027-129	2
COLLAR,6.8X10X14.5 (Ref # 92027A)	92027-156	3
BULB,12V 27/8W (Ref # 92069)	92069-059	1
DAMPER,FENDER (Ref # 92075)	92075-121	3

© 2026 Kawasaki Motors Corp., U.S.A.