2008 KLR™650 PARTS DIAGRAM

Brake Pedal

F2260

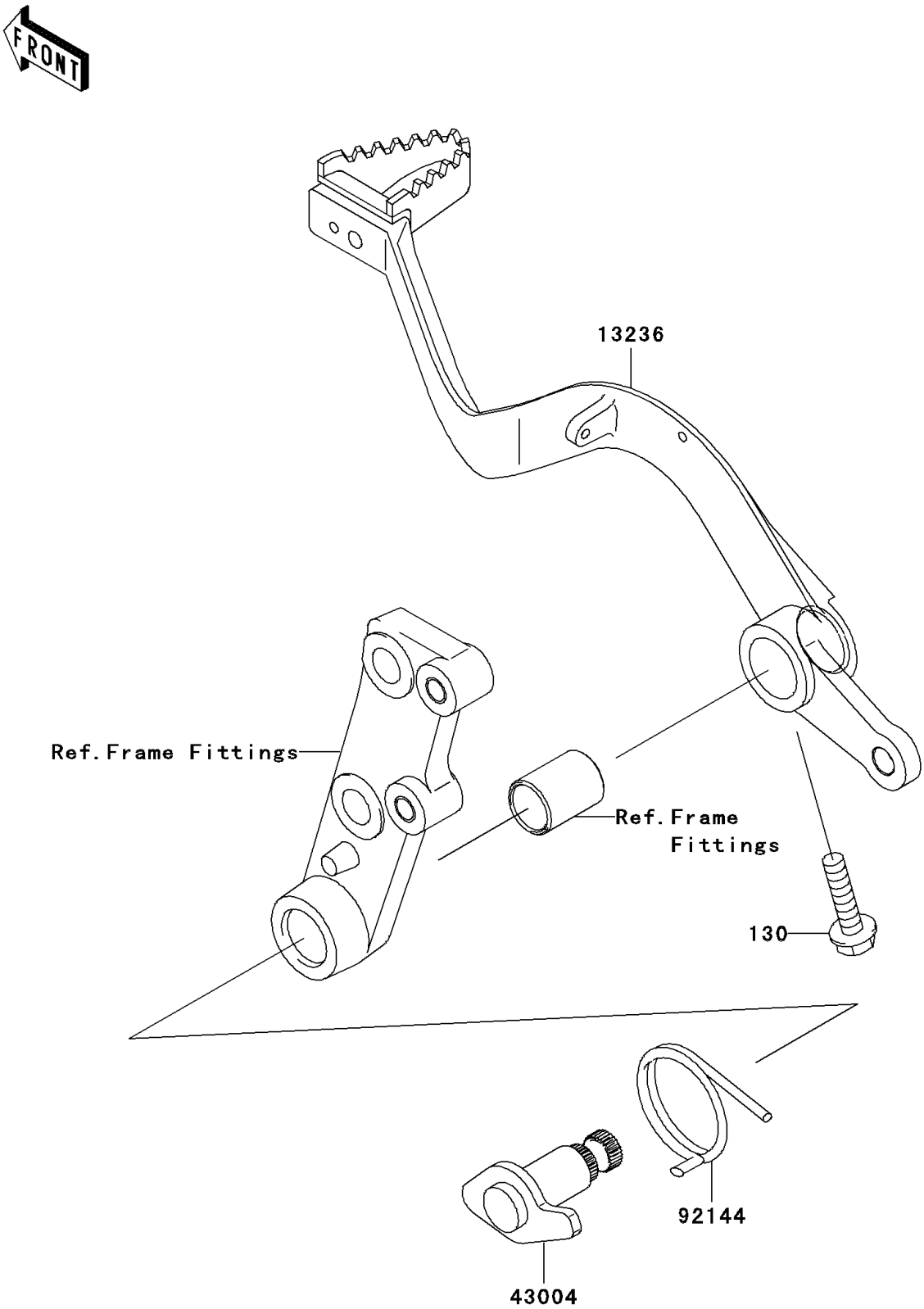

© 2026 Kawasaki Motors Corp., U.S.A.

2008 KLR™650 PARTS LIST

Brake Pedal

ITEM NAME	PART NUMBER	QUANTITY
BOLT-FLANGED,6X25 (Ref # 130)	130BA0625	1
LEVER-COMP,BRAKE PEDAL (Ref # 13236)	13236-0112	1
SHAFT-BRAKE (Ref # 43004)	43004-1120	1
SPRING,BRAKE PEDAL RETURN (Ref # 92144)	92144-1082	1

© 2026 Kawasaki Motors Corp., U.S.A.