2021 JET SKI® STX®160 PARTS DIAGRAM

Cylinder Head

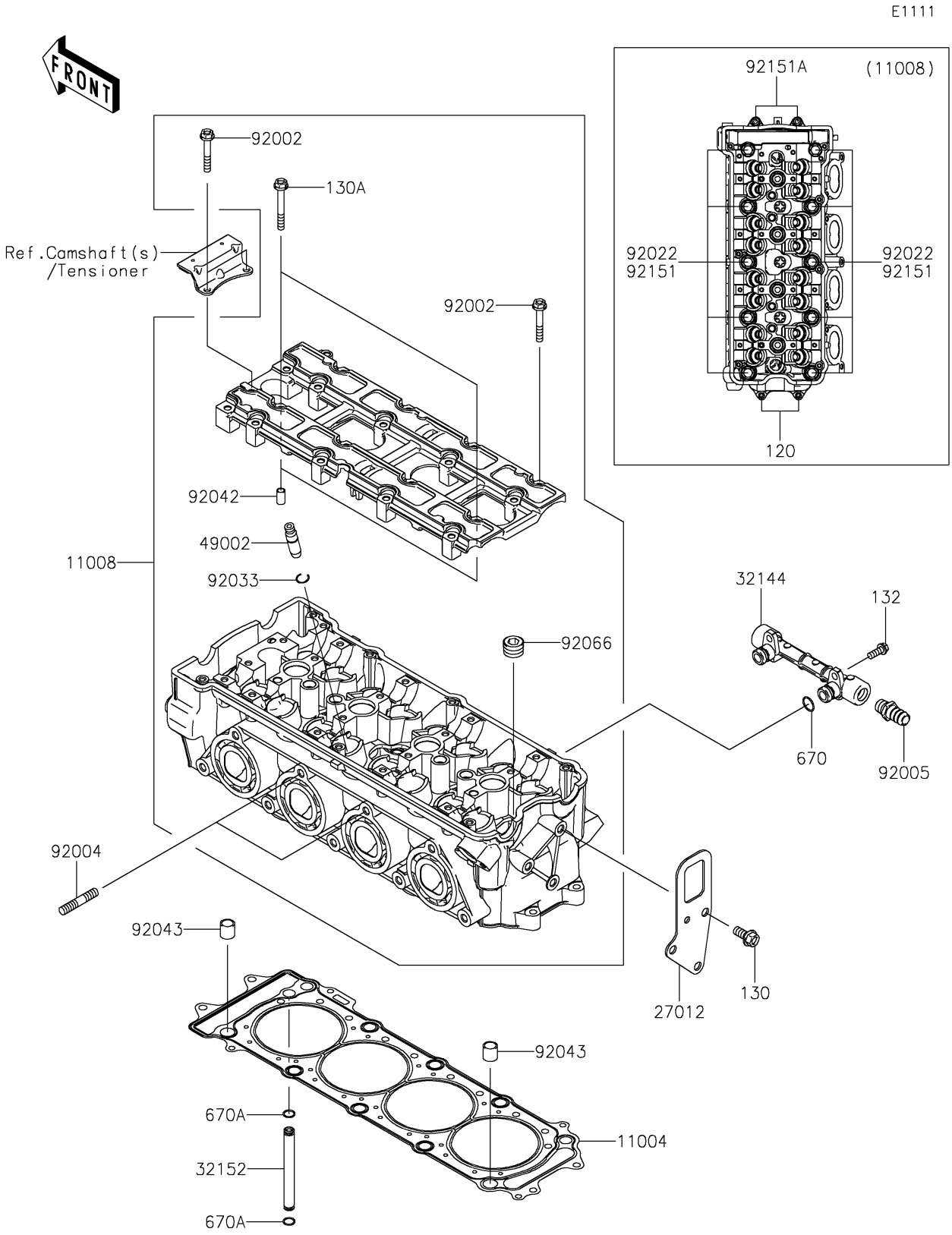

© 2024 Kawasaki Motors Corp., U.S.A.

2021 JET SKI® STX®160 PARTS LIST

Cylinder Head

ITEM NAME	PART NUMBER	QUANTITY
GASKET-HEAD (Ref # 11004)	11004-3721	1
HEAD-COMP-CYLINDER (Ref # 11008)	11008-3709	1
HOOK,ENGINE,RR (Ref # 27012)	27012-3863	1
PIPE-ASSY (Ref # 32144)	32144-3709	1
PIPE,OIL (Ref # 32152)	32152-1544	1
GUIDE-VALVE (Ref # 49002)	49002-1140	16
BOLT,6X40 (Ref # 92002)	92002-1756	18
STUD,8X30 (Ref # 92004)	92004-3743	2
FITTING (Ref # 92005)	92005-3714	1
WASHER,11.5X20.5X1.6 (Ref # 92022)	92022-1720	10
RING-SNAP (Ref # 92033)	92033-1247	16
PIN,DOWEL,6.3X8X14 (Ref # 92042)	92042-007	2
PIN,14X14 (Ref # 92043)	92043-1593	2
PLUG,PT1/2X12.5 (Ref # 92066)	92066-0002	5
BOLT,11X168 (Ref # 92151)	92151-1513	10
BOLT,SOCKET,7X120 (Ref # 92151A)	92151-1804	2
BOLT-SOCKET,6X30 (Ref # 120)	120CD0630	2
BOLT-FLANGED,8X18 (Ref # 130)	130BD0818	3
BOLT-FLANGED,6X50 (Ref # 130A)	130CD0650	2
BOLT-FLANGED-SMALL,6X16 (Ref # 132)	132BD0616	2
O RING,12MM (Ref # 670)	670B2012	2
O RING,7MM (Ref # 670A)	670D1507	2

© 2024 Kawasaki Motors Corp., U.S.A.