2015 Ninja® ZX™-10R ABS

PARTS DIAGRAM

Rear Wheel/Chain

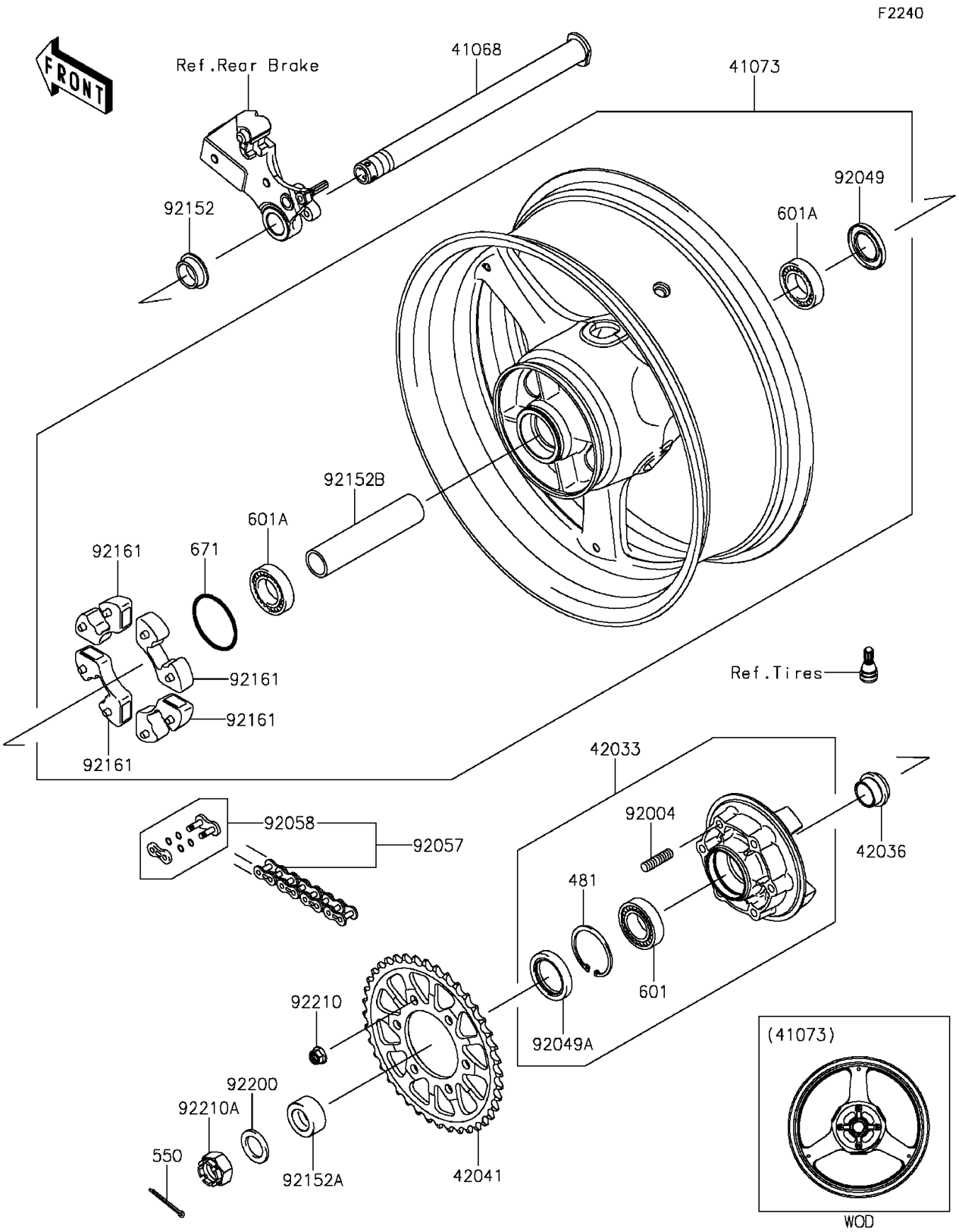

© 2026 Kawasaki Motors Corp., U.S.A.

2015 Ninja® ZX™-10R ABS

PARTS LIST

Rear Wheel/Chain

ITEM NAME	PART NUMBER	QUANTITY
AXLE,RR (Ref # 41068)	41068-0035	1
WHEEL-ASSY,RR,G.BLACK (Ref # 41073)	41073-0583-18F	1
COUPLING-ASSY,RR HUB (Ref # 42033)	42033-0038	1
SLEEVE,RR HUB,L=22 (Ref # 42036)	42036-1279	1
SPROCKET-HUB,39T (Ref # 42041)	42041-0096	1
STUD,10X19 (Ref # 92004)	92004-0028	6
SEAL-OIL,31X52X5 (Ref # 92049)	92049-0722	1
SEAL-OIL,PJN 40 55 8 (Ref # 92049A)	92049-1376	1
CHAIN,DRIVE,EK525RMX2/3D,112L (Ref # 92057)	92057-0599	1
JOINT-CHAIN (Ref # 92058)	92058-0032	1
COLLAR,25X32X13 (Ref # 92152)	92152-0289	1
COLLAR,25X40X18.7 (Ref # 92152A)	92152-0867	1
COLLAR (Ref # 92152B)	92152-0868	1
DAMPER,SHOCK,RR HUB (Ref # 92161)	92161-0342	4
WASHER,25.5X38X3.2 (Ref # 92200)	92200-0278	1
NUT,LOCK,FLANGED,10MM (Ref # 92210)	92210-0276	6
NUT,CASTLE,24MM (Ref # 92210A)	92210-0280	1
CIRCLIP (Ref # 481)	481J5500	1
PIN-COTTER,4.0X40 (Ref # 550)	550AA4040	1
BEARING-BALL,#6006G (Ref # 601)	601B6006G	1
BEARING-BALL (Ref # 601A)	601B6205UU	2
O RING,60MM (Ref # 671)	671B2560	1

© 2026 Kawasaki Motors Corp., U.S.A.