2002 KX85 PARTS DIAGRAM

Rear Brake(A1-A3)

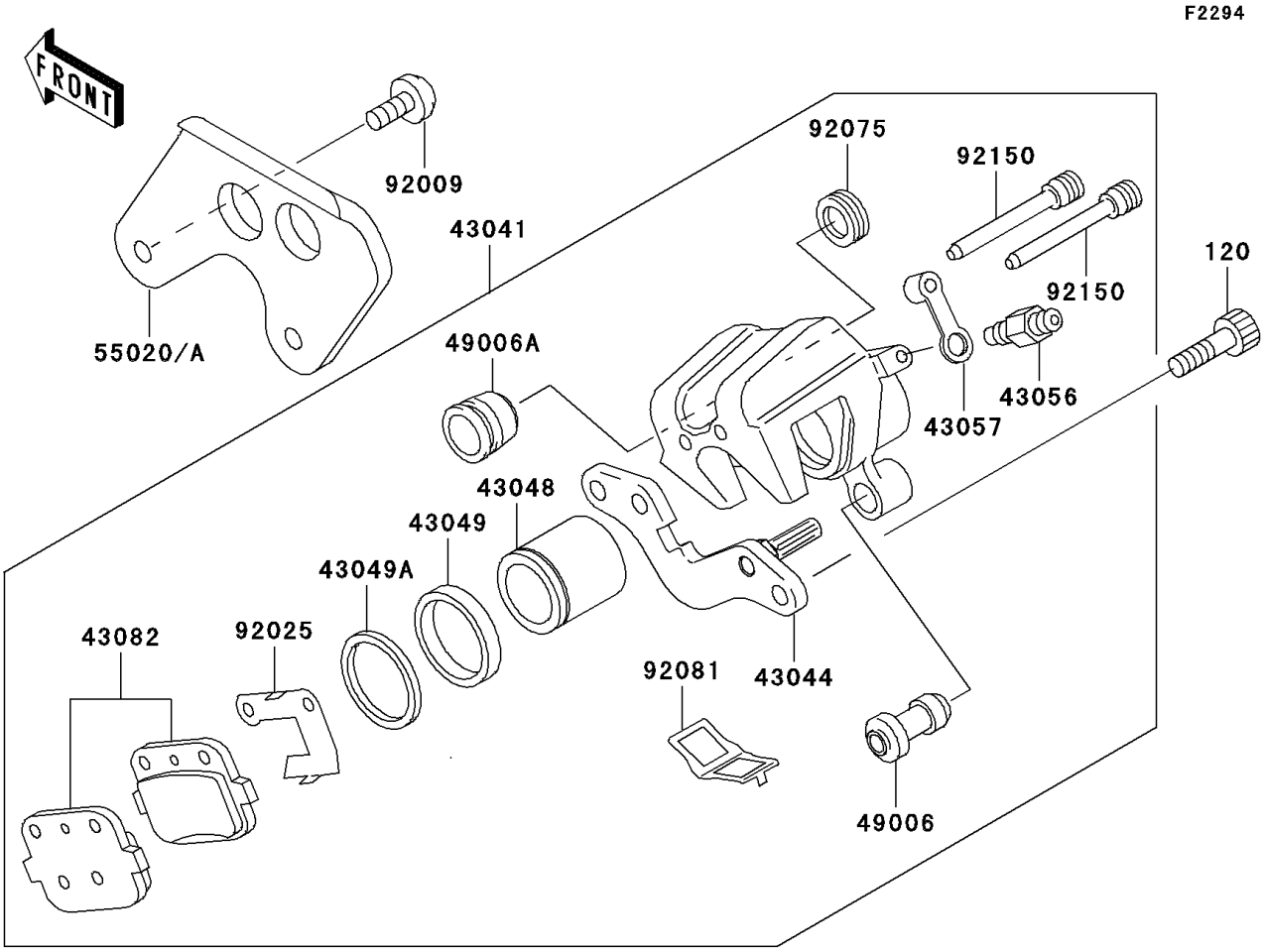

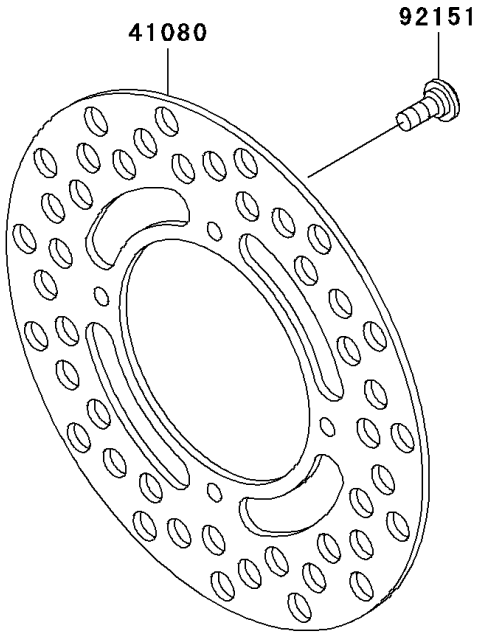

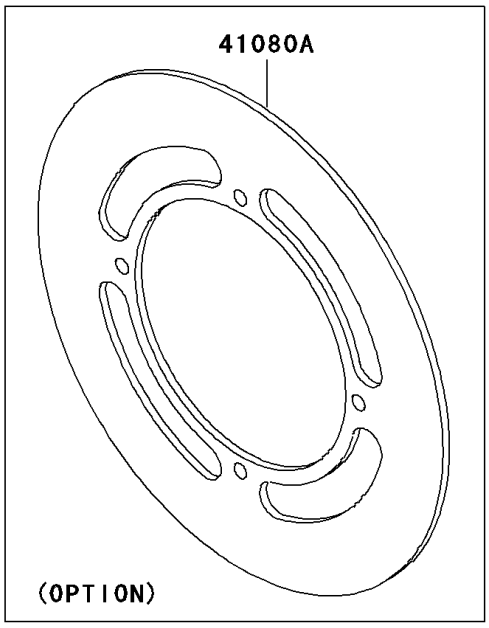

© 2024 Kawasaki Motors Corp., U.S.A.

2002 KX85 PARTS LIST

Rear Brake(A1-A3)

ITEM NAME	PART NUMBER	QUANTITY
BOLT-SOCKET (Ref # 120)	120P0816	2
DISC,RR (Ref # 41080)	41080-1492	1
DISC,RR (Ref # 41080A)	41080-1493	1
CALIPER-SUB-ASSY,RR (Ref # 43041)	43041-1815	1
HOLDER-COMP-CALIPER,RR (Ref # 43044)	43044-1076	1
PISTON-CALIPER (Ref # 43048)	43048-1064	1
PACKING,PISTON SEAL (Ref # 43049)	43049-1060	1
PACKING,PISTON SEAL (Ref # 43049A)	43049-1061	1
BREATHER (Ref # 43056)	43056-1055	1
CAP-BREATHER (Ref # 43057)	43057-1001	1
PAD-ASSY-BRAKE (Ref # 43082)	43082-1205	1
BOOT,CALIPER (Ref # 49006)	49006-1088	1
BOOT,CALIPER (Ref # 49006A)	49006-1089	1
GUARD,CALIPER,P.WHITE (Ref # 55020A)	55020-1247-6F	1
SCREW,6X10,WHITE (Ref # 92009)	92009-1286	2
SHIM,PAD (Ref # 92025)	92025-1817	1
DAMPER (Ref # 92075)	92075-1414	1
SPRING,PAD (Ref # 92081)	92081-1502	1
BOLT (Ref # 92150)	92150-1144	2
BOLT,DISC PLATE,6MM (Ref # 92151)	92151-1799	4

© 2024 Kawasaki Motors Corp., U.S.A.