2012 NINJA® ZX™-10R ABS PARTS DIAGRAM

Rear Wheel/Chain

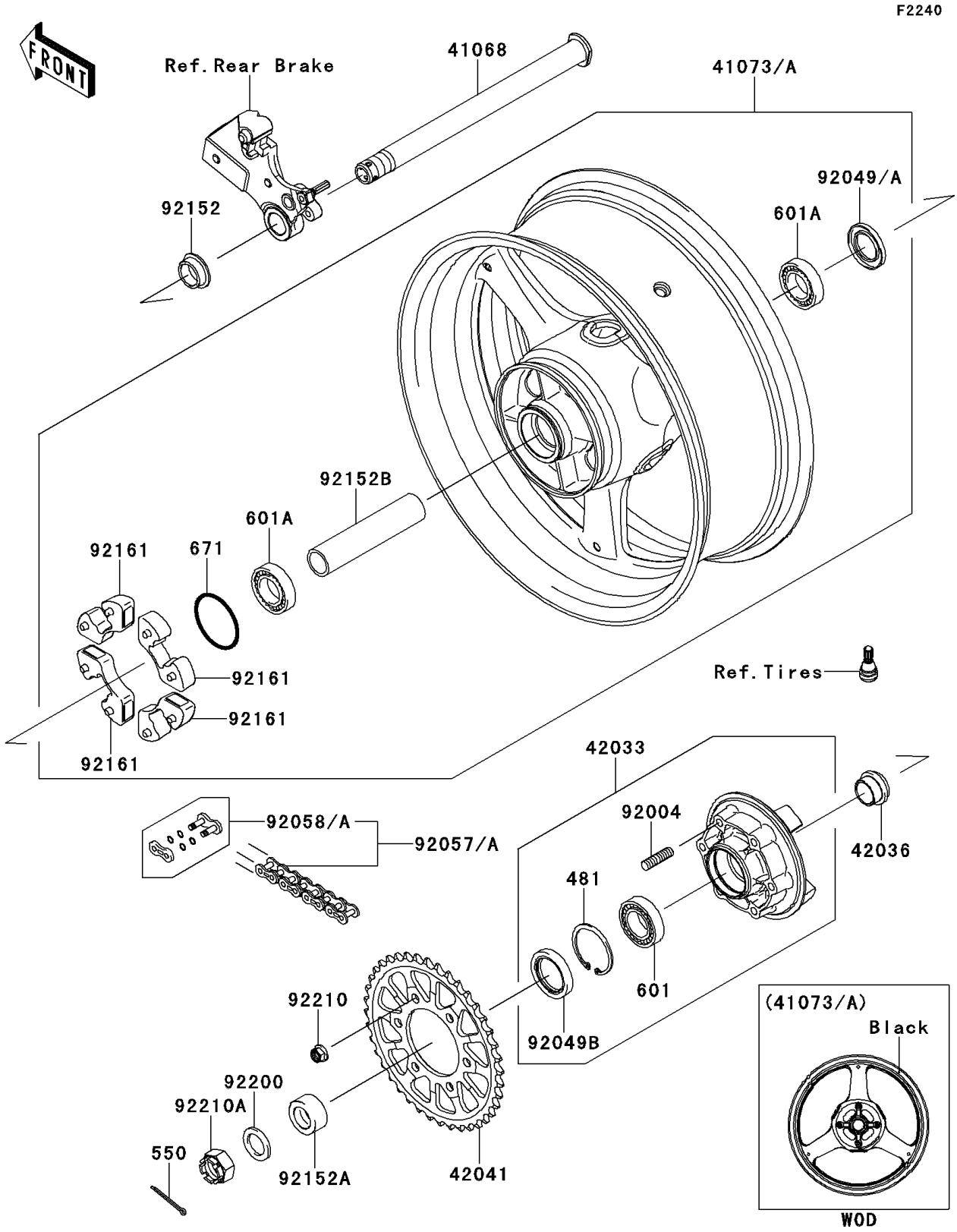

© 2024 Kawasaki Motors Corp., U.S.A.

2012 NINJA® ZX™-10R ABS PARTS LIST

Rear Wheel/Chain

ITEM NAME	PART NUMBER	QUANTITY

© 2024 Kawasaki Motors Corp., U.S.A.