2011 NINJA® ZX™-10R ABS PARTS DIAGRAM

Front Fender(s)

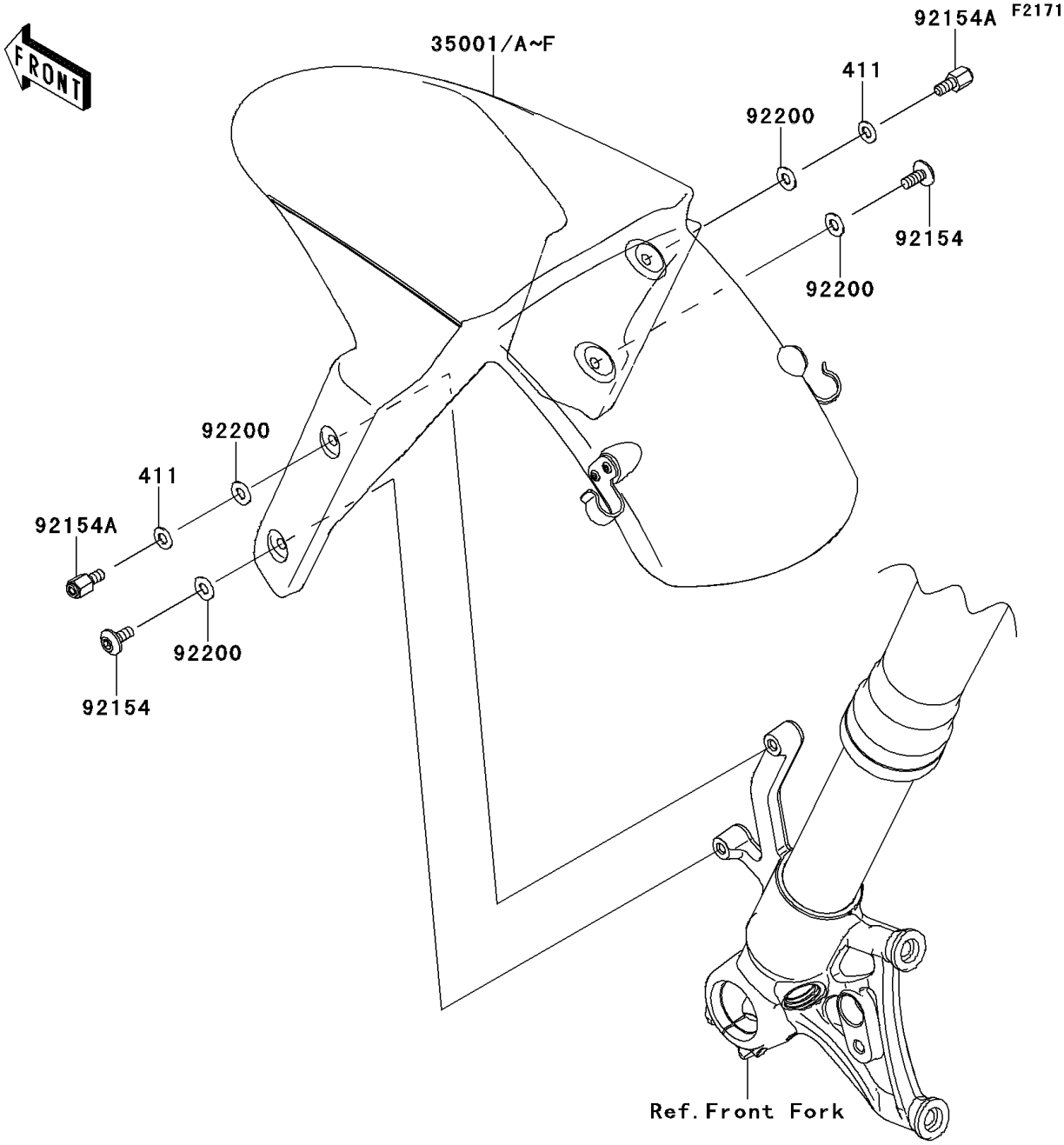

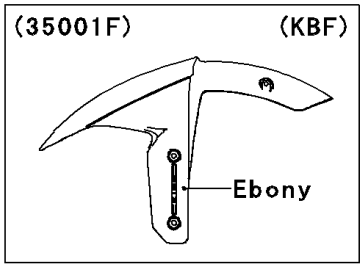

WD

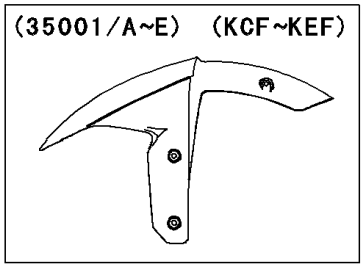

WOD

(35001)	Red
(35001A)	Gray
(35001B)	F. Ebony
(35001C)	White
(35001D)	Black
(35001E)	Green

© 2024 Kawasaki Motors Corp., U.S.A.

2011 NINJA® ZX™-10R ABS PARTS LIST

Front Fender(s)

ITEM NAME	PART NUMBER	QUANTITY
FENDER-ASSY-FRONT,EBONY (Ref # 35001F)	35001-5106-H8	1
BOLT,SOCKET,6X14 (Ref # 92154)	92154-0745	2
BOLT,6MM (Ref # 92154A)	92154-0746	2
WASHER,6.5X14X1 (Ref # 92200)	92200-1388	4
WASHER-PLAIN,6.5X13X1 (Ref # 411)	411AB0600	2

© 2024 Kawasaki Motors Corp., U.S.A.