2004 KX85 PARTS DIAGRAM

Rear Suspension

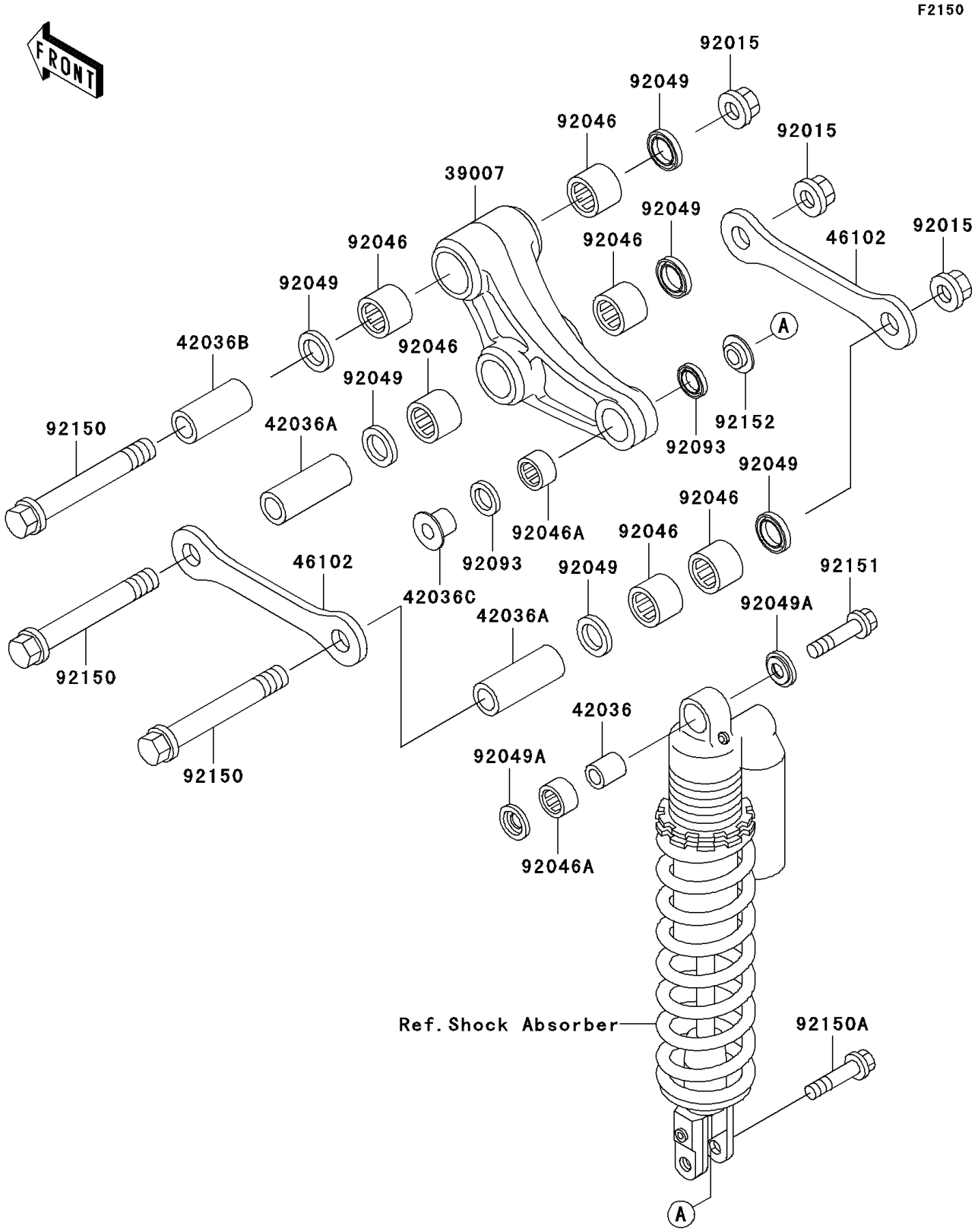

© 2024 Kawasaki Motors Corp., U.S.A.

2004 KX85 PARTS LIST

Rear Suspension

ITEM NAME	PART NUMBER	QUANTITY
ARM-SUSP,UNI TRAK (Ref # 39007)	39007-1261	1
SLEEVE,10X16X19 (Ref # 42036)	42036-1248	1
SLEEVE,12X18X57 (Ref # 42036A)	42036-1273	2
SLEEVE,12X18X49 (Ref # 42036B)	42036-1274	1
SLEEVE (Ref # 42036C)	42036-1351	1
ROD,SUSPENSION (Ref # 46102)	46102-1291	2
NUT,FLANGED,12MM (Ref # 92015)	92015-1433	3
BEARING-NEEDLE,18BM2416 (Ref # 92046)	92046-1144	6
BEARING-NEEDLE,16BM2212 (Ref # 92046A)	92046-1192	2
SEAL-OIL (Ref # 92049)	92049-1328	6
SEAL-OIL (Ref # 92049A)	92049-1330	2
SEAL (Ref # 92093)	92093-1436	2
BOLT,FLANGED,12X83 (Ref # 92150)	92150-1412	3
BOLT,FLANGED,10X40 (Ref # 92150A)	92150-1711	1
BOLT,FLANGED,10X45 (Ref # 92151)	92151-1413	1
COLLAR (Ref # 92152)	92152-1139	1

© 2024 Kawasaki Motors Corp., U.S.A.