1998 KX80 PARTS DIAGRAM

Muffler(s)

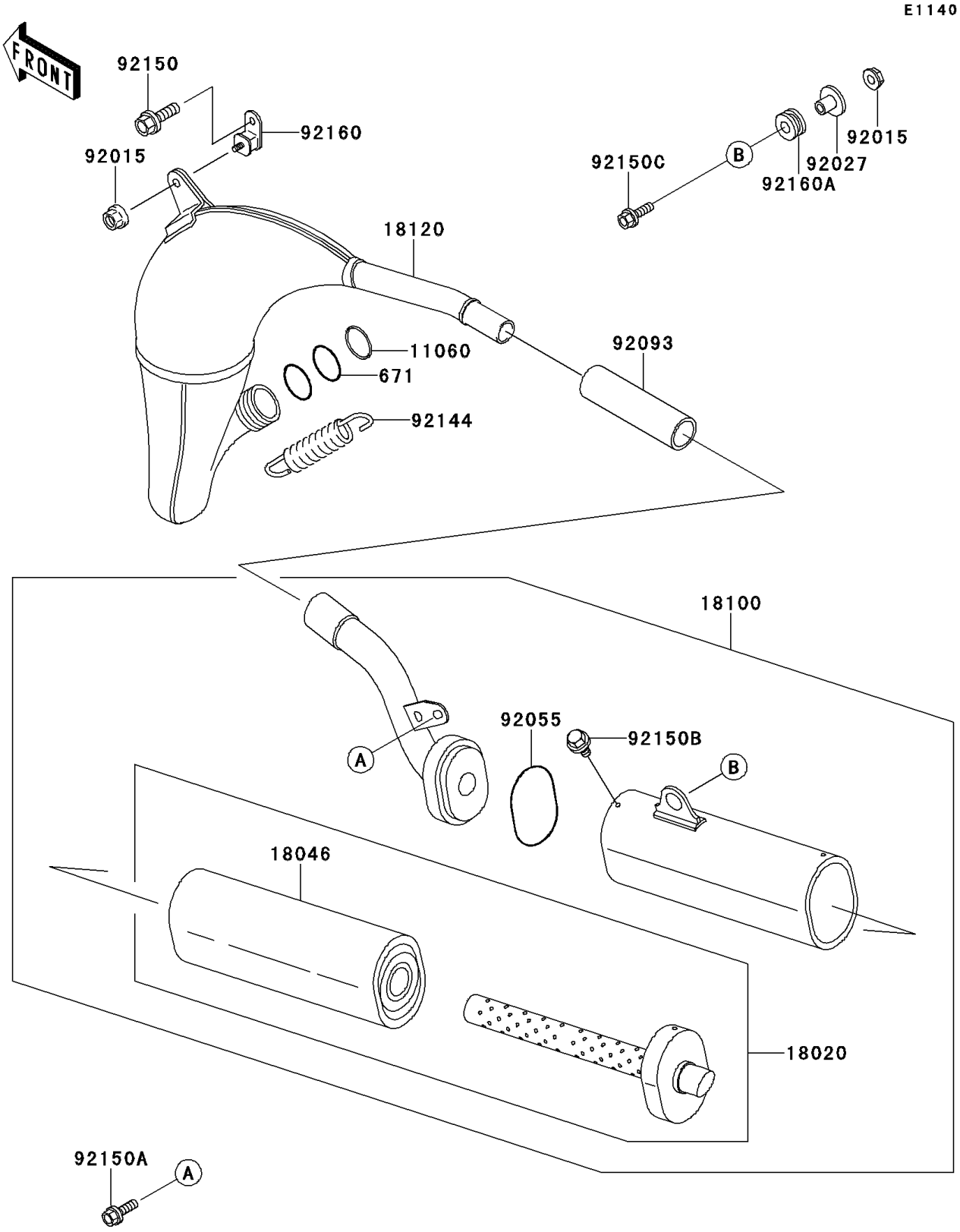

© 2024 Kawasaki Motors Corp., U.S.A.

1998 KX80 PARTS LIST

Muffler(s)

ITEM NAME	PART NUMBER	QUANTITY
O RING (Ref # 671)	671E2535	2
GASKET,EXHAUST HOLDER (Ref # 11060)	11060-1842	1
BAFFLE (Ref # 18020)	18020-1233	1
WOOL (Ref # 18046)	18046-1354	1
BODY-ASSY-MUFFLER (Ref # 18100)	18100-1075	1
CHAMBER-EXHAUST (Ref # 18120)	18120-1081	1
NUT,FLANGED,6MM (Ref # 92015)	92015-1078	2
COLLAR,L=13.1,BLACK (Ref # 92027)	92027-1450	1
RING-O,BAFFLE PIPE (Ref # 92055)	92055-1461	1
SEAL,MUFFLER JOINT (Ref # 92093)	92093-1200	1
SPRING,EXHAUST CONNECTING (Ref # 92144)	92144-1470	2
BOLT,6X14 (Ref # 92150)	92150-1340	1
BOLT,6X14 (Ref # 92150A)	92150-1392	1
BOLT,5X8 (Ref # 92150B)	92150-1406	4
BOLT,FLANGED,6X25 (Ref # 92150C)	92150-1507	1
DAMPER,MUFFLER,FR (Ref # 92160)	92160-1176	1
DAMPER,MUFFLER FITTING (Ref # 92160A)	92160-1913	1

© 2024 Kawasaki Motors Corp., U.S.A.