2022 Teryx4 Camo PARTS DIAGRAM

Wheels/Tires

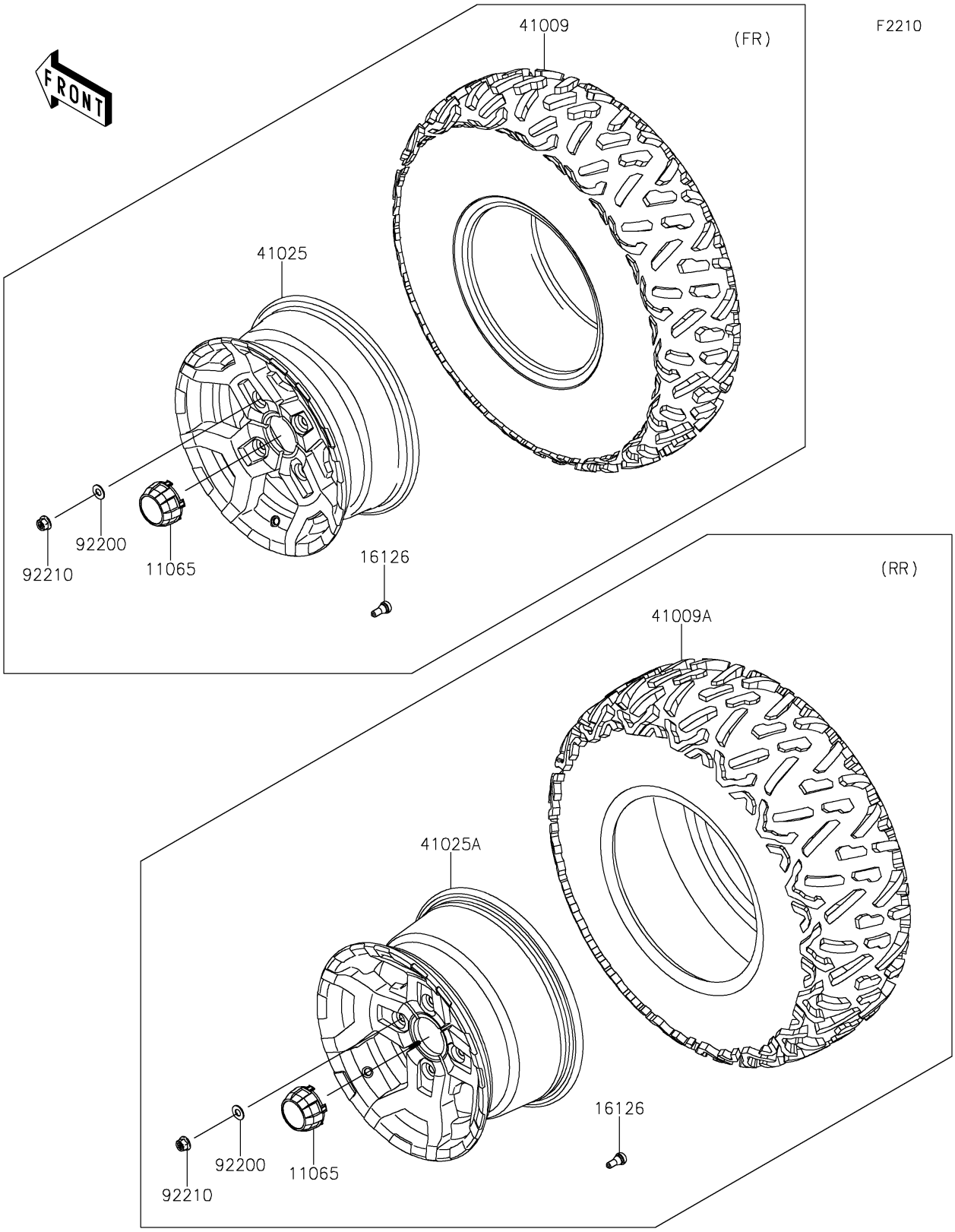

© 2024 Kawasaki Motors Corp., U.S.A.

2022 Teryx4 Camo PARTS LIST

Wheels/Tires

ITEM NAME	PART NUMBER	QUANTITY
CAP,WHEEL,F.BLACK (Ref # 11065)	11065-0893-6Z	4
VALVE (Ref # 16126)	16126-4001	4
TIRE,27X9.00R14 6PR,BIGHORN2.0 (Ref # 41009)	41009-0589	2
TIRE,27X11.00R14 6PR,BIGHORN2 (Ref # 41009A)	41009-0590	2
RIM,FR,14X6.0AT,BLACK (Ref # 41025)	41025-0424-31D	2
RIM,14X8.0AT,BLACK (Ref # 41025A)	41025-0425-31D	2
WASHER,12.1X25X1.6 (Ref # 92200)	92200-0455	16
NUT,12MM (Ref # 92210)	92210-0603	16

© 2024 Kawasaki Motors Corp., U.S.A.