2010 KLR™650 PARTS DIAGRAM

Front Hub

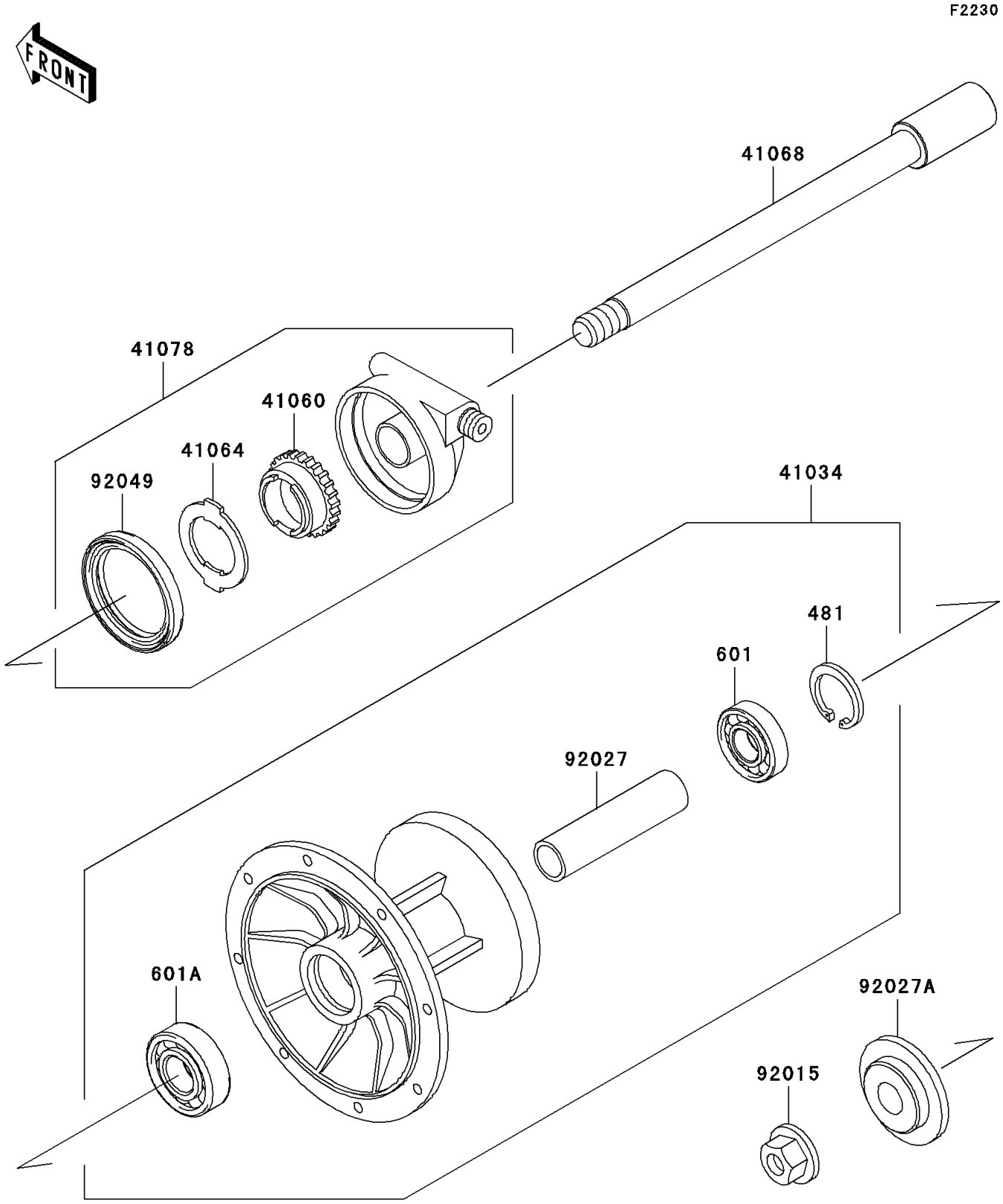

© 2024 Kawasaki Motors Corp., U.S.A.

2010 KLR™650 PARTS LIST

Front Hub

ITEM NAME	PART NUMBER	QUANTITY
CIRCLIP-TYPE-C,35MM (Ref # 481)	481J3500	1
BEARING-BALL,#6202UG (Ref # 601)	601B6202UG	1
BEARING-BALL,#6203UG (Ref # 601A)	601B6203UG	1
DRUM-ASSY,FRONT BRAKE,F.BLACK (Ref # 41034)	41034-0040-21	1
GEAR-METER SCREW,24T (Ref # 41060)	41060-1101	1
RECEIVER-SPEEDOMETER (Ref # 41064)	41064-1051	1
AXLE,FR (Ref # 41068)	41068-0055	1
CASE-ASSY-METER GEAR (Ref # 41078)	41078-1051	1
NUT,14MM (Ref # 92015)	92015-1407	1
COLLAR,FRONT BRAKE DRUM,L=79 (Ref # 92027)	92027-1683	1
COLLAR (Ref # 92027A)	92027-1864	1
SEAL-OIL,METER GEAR CASE (Ref # 92049)	92049-1172	1

© 2024 Kawasaki Motors Corp., U.S.A.