1996 KX80 PARTS DIAGRAM

Rear Suspension

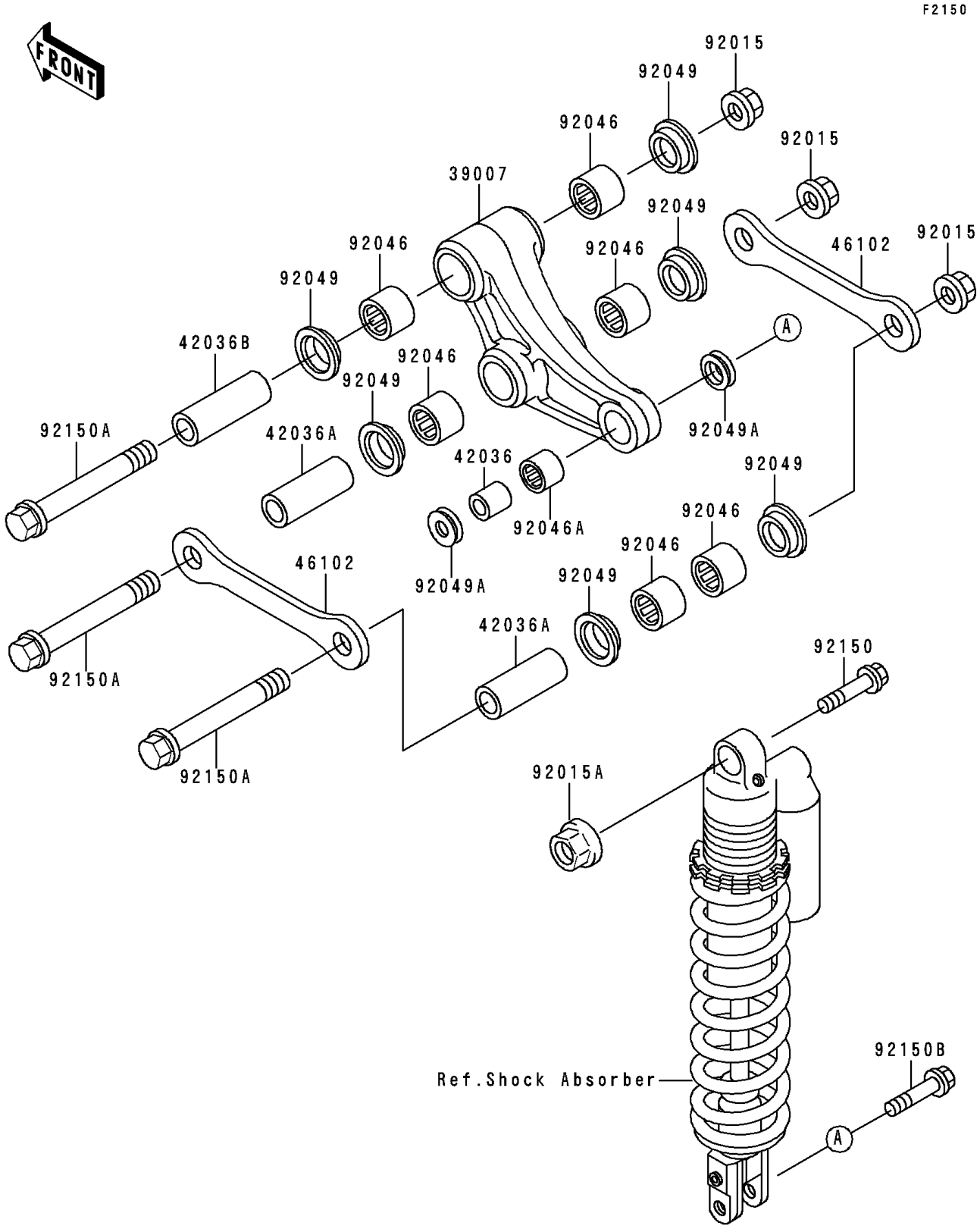

© 2024 Kawasaki Motors Corp., U.S.A.

1996 KX80 PARTS LIST

Rear Suspension

ITEM NAME	PART NUMBER	QUANTITY
ARM-SUSP,UNI TRAK (Ref # 39007)	39007-1194	1
SLEEVE,10X16X19 (Ref # 42036)	42036-1248	1
SLEEVE,12X18X57 (Ref # 42036A)	42036-1273	2
SLEEVE,12X18X49 (Ref # 42036B)	42036-1274	1
ROD,SUSPENSION (Ref # 46102)	46102-1291	2
NUT,FLANGED,12MM (Ref # 92015)	92015-1433	3
NUT,FLANGED,10MM (Ref # 92015A)	92015-1502	1
BEARING-NEEDLE,18BM2416 (Ref # 92046)	92046-1144	6
BEARING-NEEDLE,16BM2212 (Ref # 92046A)	92046-1192	1
SEAL-OIL (Ref # 92049)	92049-1328	6
SEAL-OIL (Ref # 92049A)	92049-1330	2
BOLT,FLANGED,10X57 (Ref # 92150)	92150-1227	1
BOLT,FLANGED,12X83 (Ref # 92150A)	92150-1412	3
BOLT,FLANGED,10X40 (Ref # 92150B)	92150-1711	1

© 2024 Kawasaki Motors Corp., U.S.A.