2021 TERYX® S PARTS DIAGRAM

Camshaft(s)/Tensioner

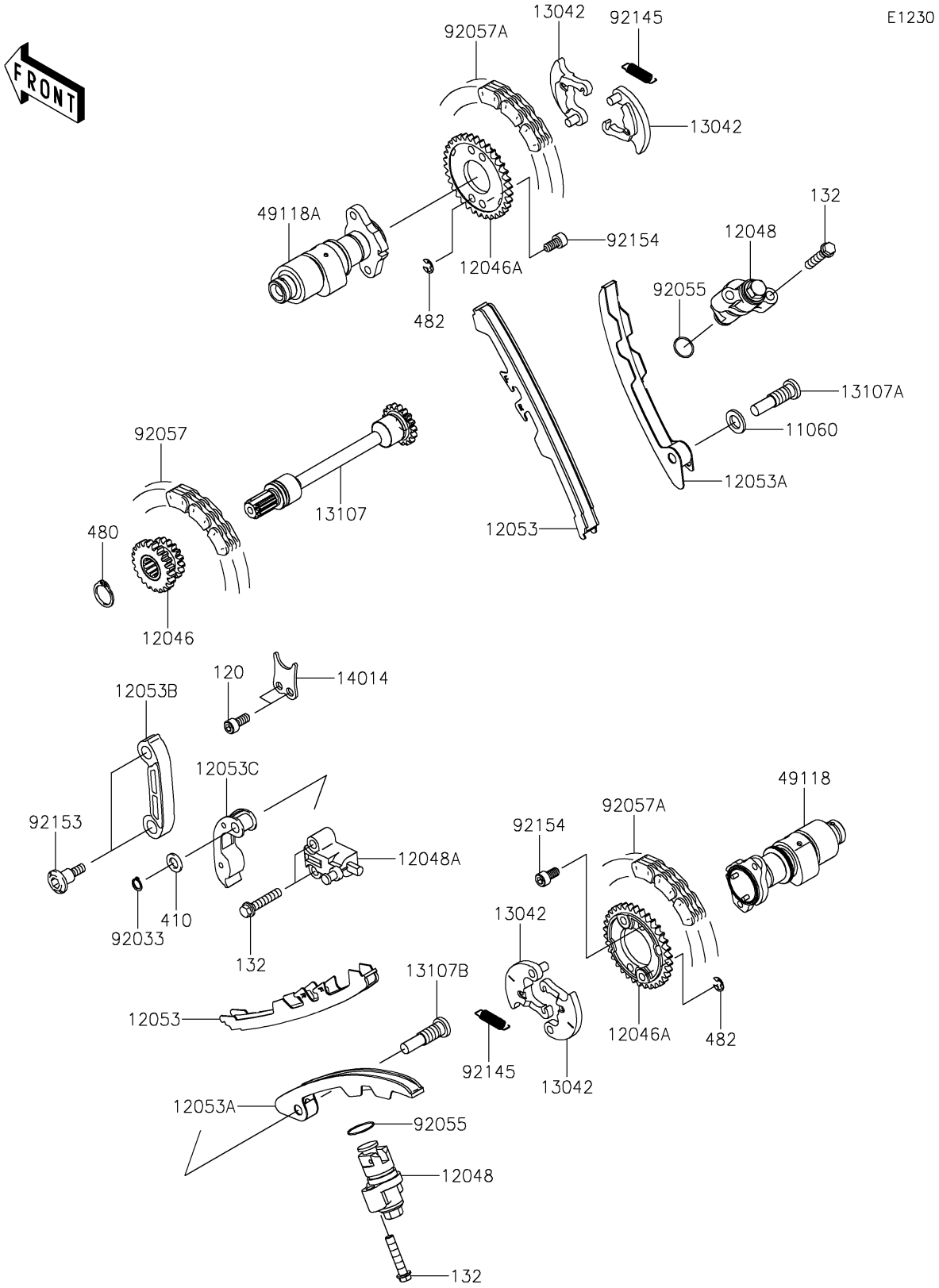

© 2024 Kawasaki Motors Corp., U.S.A.

2021 TERYX® S PARTS LIST

Camshaft(s)/Tensioner

ITEM NAME	PART NUMBER	QUANTITY

© 2024 Kawasaki Motors Corp., U.S.A.