2021 W800 PARTS DIAGRAM

Cylinder/Piston(s)

E1120

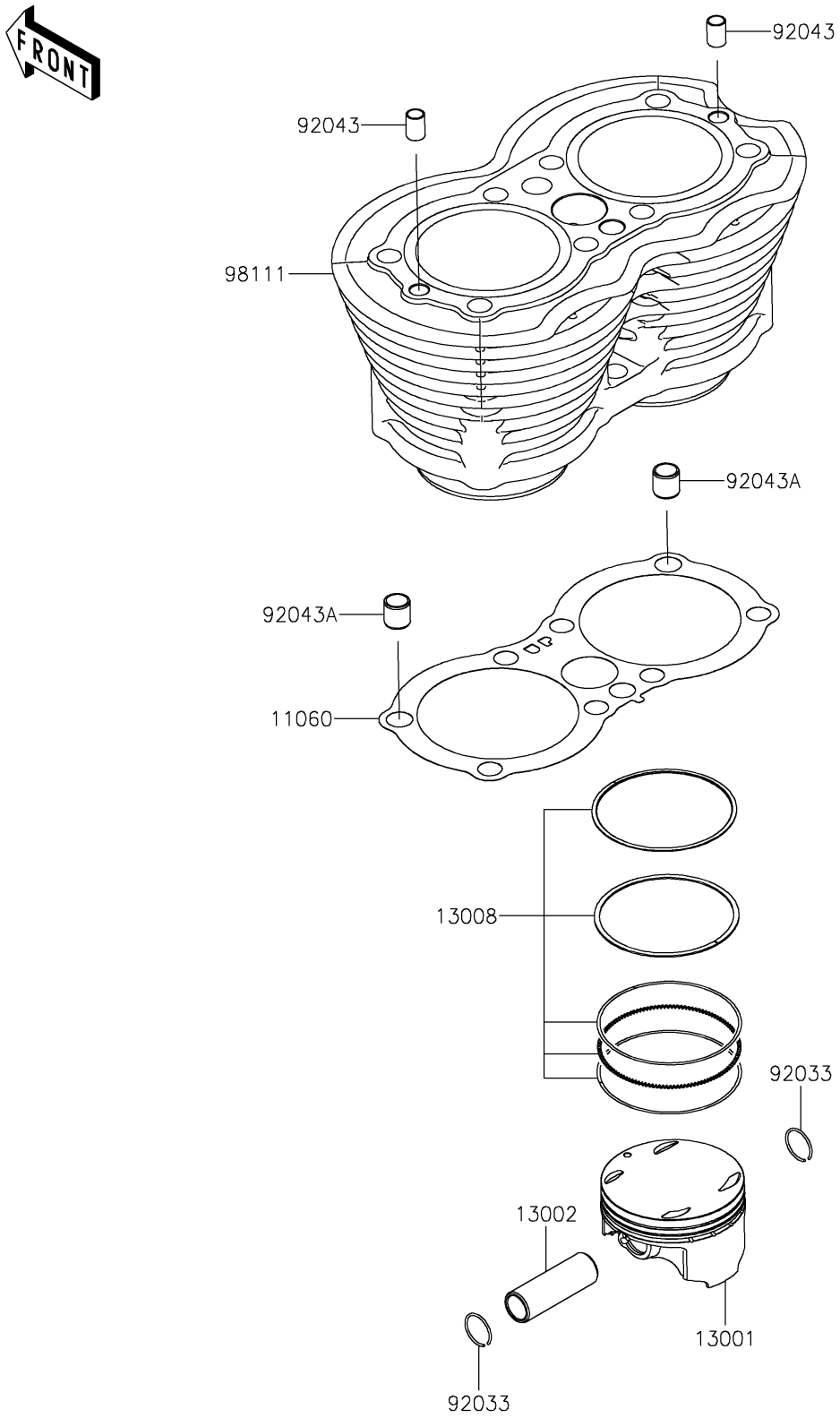

© 2024 Kawasaki Motors Corp., U.S.A.

2021 W800 PARTS LIST

Cylinder/Piston(s)

ITEM NAME	PART NUMBER	QUANTITY
GASKET,CYLINDER BASE (Ref # 11060)	11060-1889	1
PISTON-ENGINE (Ref # 13001)	13001-0812	2
PIN-PISTON (Ref # 13002)	13002-1086	2
RING-SET-PISTON (Ref # 13008)	13008-0587	2
RING-SNAP,20.5X1.2 (Ref # 92033)	92033-1099	4
PIN,DOWEL,10X14 (Ref # 92043)	92043-1037	2
PIN,11.5X14X14 (Ref # 92043A)	92043-1279	2
CYLINDER-COMP-ENGINE (Ref # 98111)	98111-0047	1

© 2024 Kawasaki Motors Corp., U.S.A.