2020 W800 PARTS DIAGRAM

Valve(s)

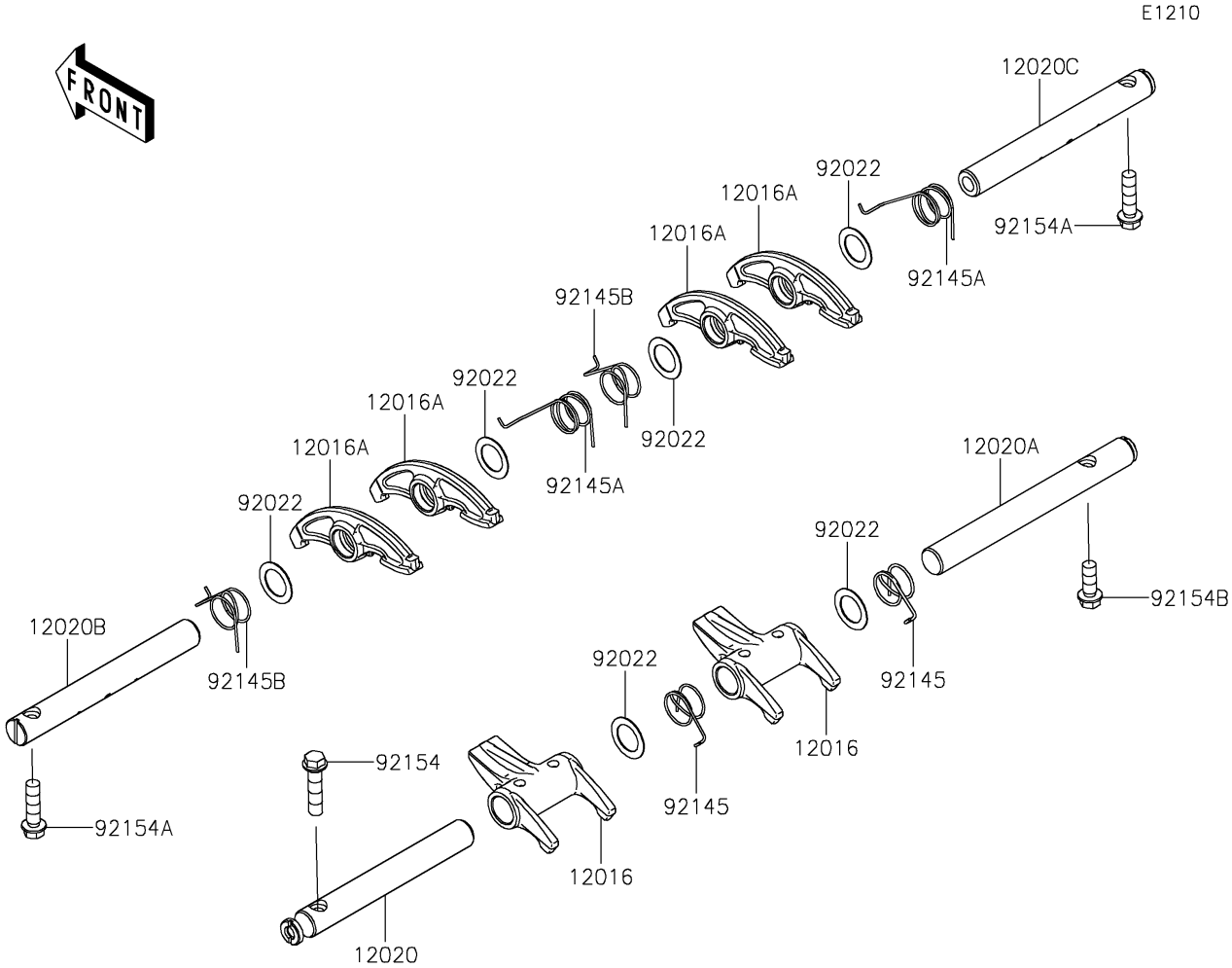

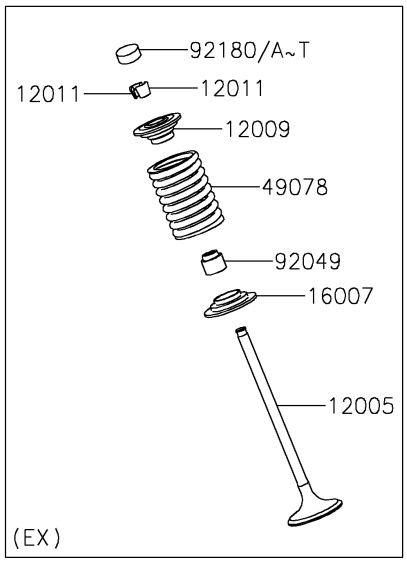

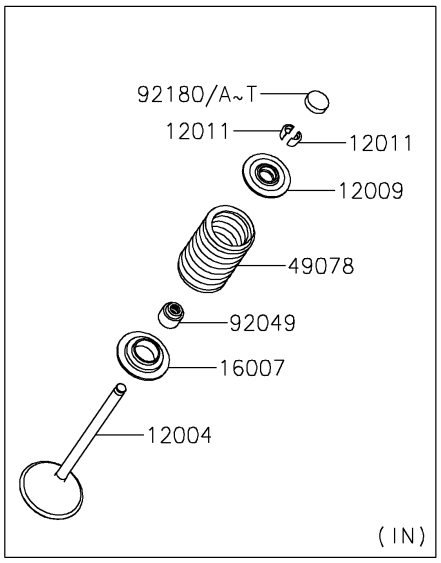

© 2024 Kawasaki Motors Corp., U.S.A.

2020 W800 PARTS LIST

Valve(s)

ITEM NAME	PART NUMBER	QUANTITY

© 2024 Kawasaki Motors Corp., U.S.A.