2020 W800 CAFE PARTS DIAGRAM

Owner's Tools

F2810

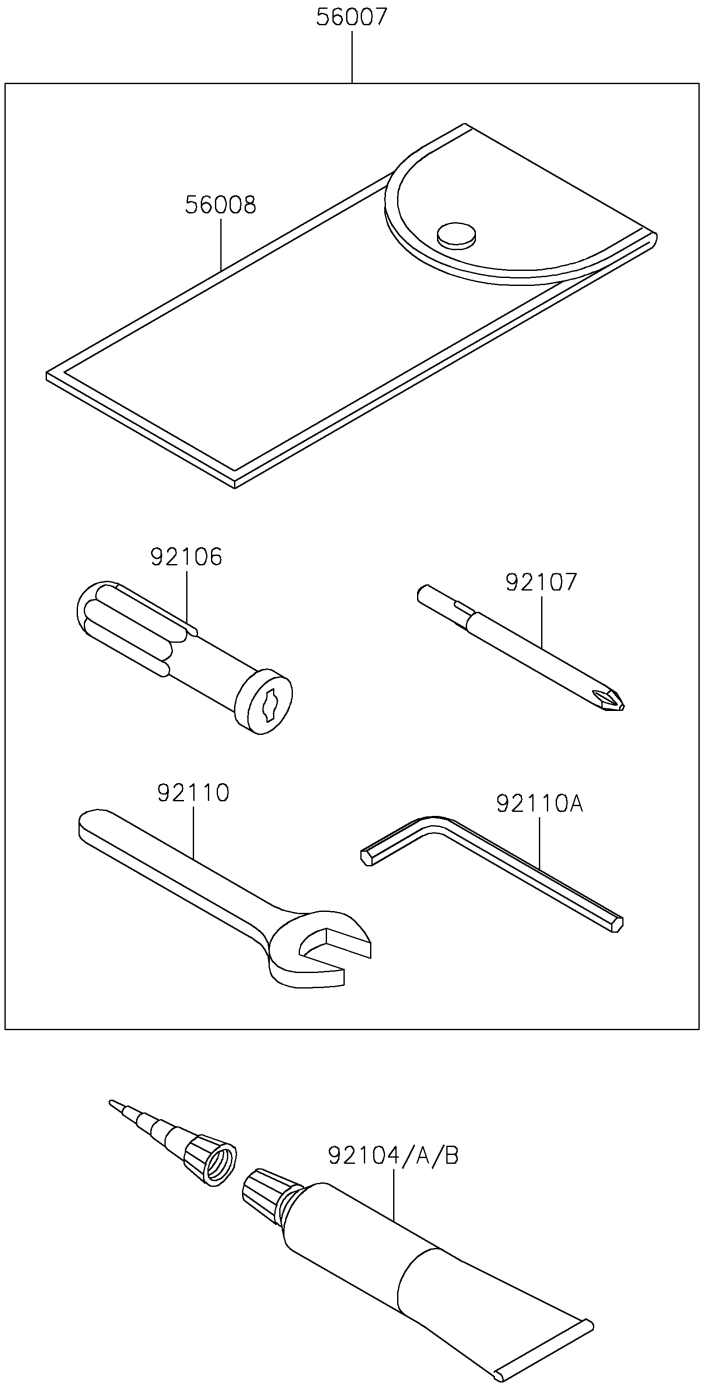

© 2024 Kawasaki Motors Corp., U.S.A.

2020 W800 CAFE PARTS LIST

Owner's Tools

ITEM NAME	PART NUMBER	QUANTITY

© 2024 Kawasaki Motors Corp., U.S.A.