2021 NINJA H2® PARTS DIAGRAM

Frame Fittings

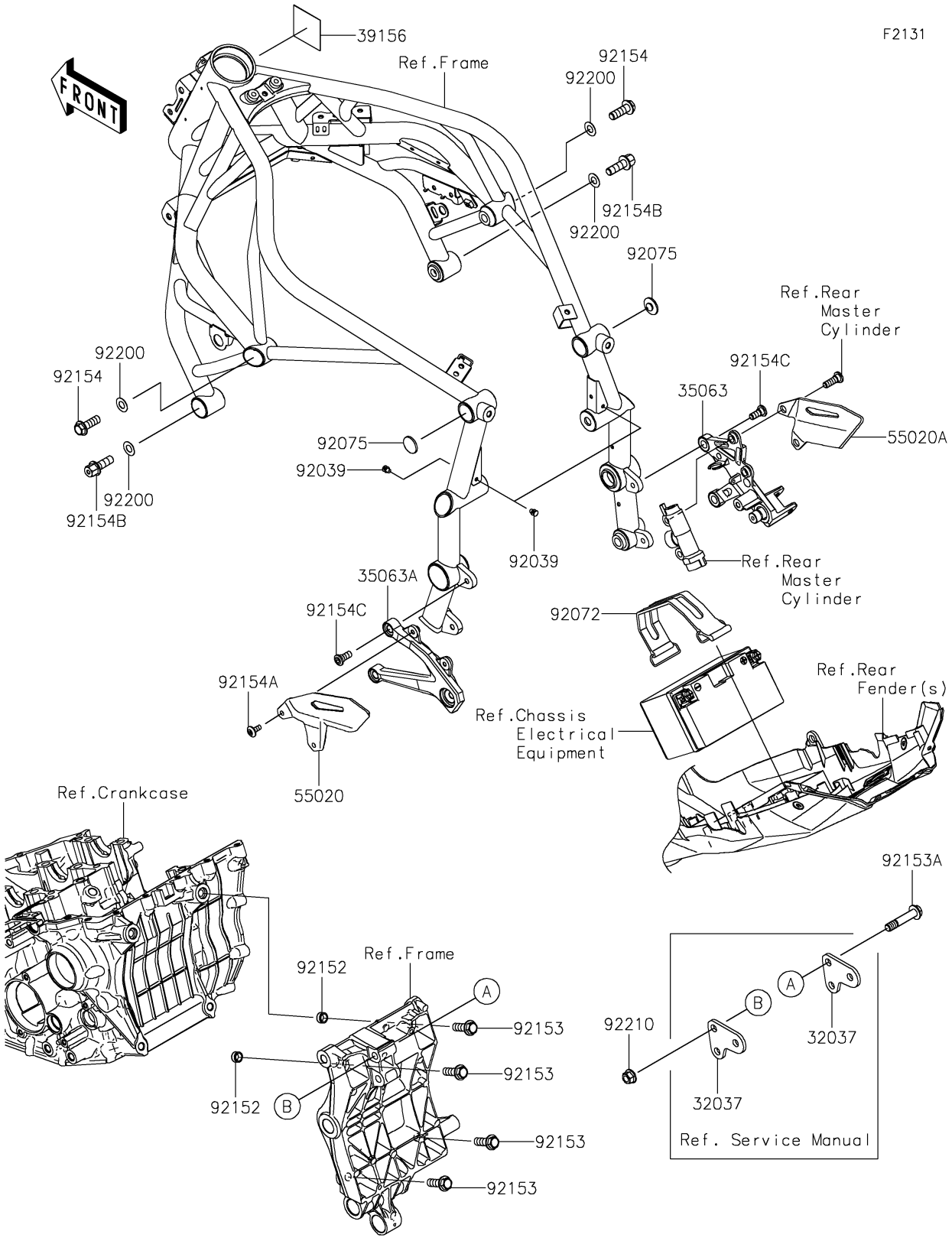

© 2024 Kawasaki Motors Corp., U.S.A.

2021 NINJA H2® PARTS LIST

Frame Fittings

ITEM NAME	PART NUMBER	QUANTITY
BRACKET-SHOCKABSORBER (Ref # 32037)	32037-0381	2
STAY,STEP,RH,F.W.M.GRAY (Ref # 35063)	35063-0994-46T	1
STAY,STEP,LH,F.W.M.GRAY (Ref # 35063A)	35063-1308-46T	1
PAD,50X50X0.5 (Ref # 39156)	39156-2132	1
GUARD,HEEL,LH (Ref # 55020)	55020-1835	1
GUARD,HEEL,RH (Ref # 55020A)	55020-1836	1
RIVET,PLASTI (Ref # 92039)	92039-0773	3
BAND,L=150 (Ref # 92072)	92072-1338	1
DAMPER,RUBBER (Ref # 92075)	92075-261	2
COLLAR,DOWEL PIN (Ref # 92152)	92152-0679	2
BOLT,FLANGED,10X30 (Ref # 92153)	92153-0801	4
BOLT,FLANGED,10X51 (Ref # 92153A)	92153-1545	3
BOLT,FLANGED,10X30 (Ref # 92154)	92154-0543	2
BOLT,SOCKET,6X14 (Ref # 92154A)	92154-0745	2
BOLT,FLANGED,10X30 (Ref # 92154B)	92154-1566	2
BOLT,SOCKET8X20 (Ref # 92154C)	92154-1711	4
WASHER,10.2X20X0.5 (Ref # 92200)	92200-1732	4
NUT,LOCK,FLANGED,10MM (Ref # 92210)	92210-1139	3

© 2024 Kawasaki Motors Corp., U.S.A.