2020 NINJA H2™ PARTS DIAGRAM

Accessory(Handle)

F2910A

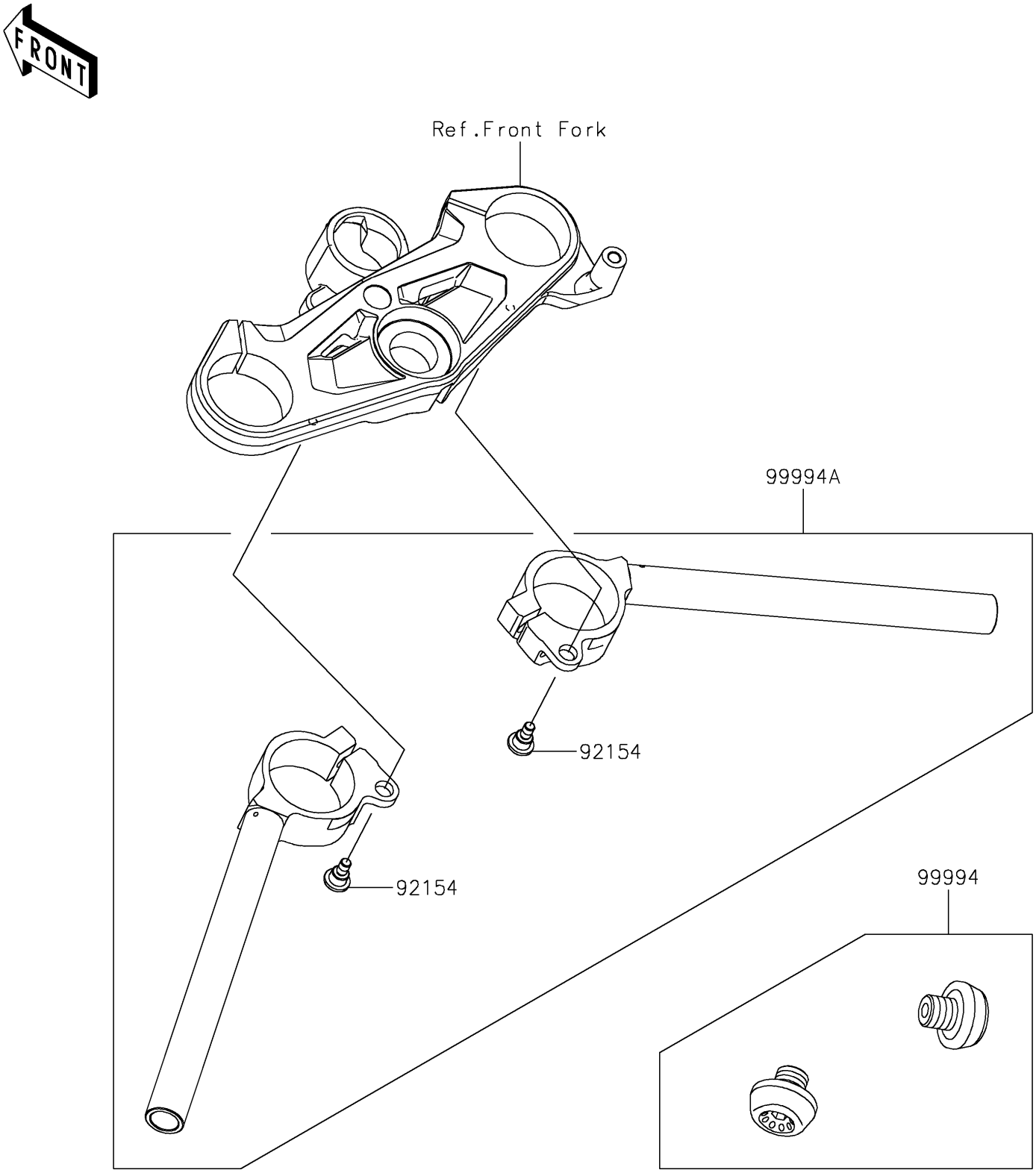

© 2025 Kawasaki Motors Corp., U.S.A.

2020 NINJA H2™ PARTS LIST

Accessory(Handle)

ITEM NAME	PART NUMBER	QUANTITY
BOLT,SOCKET,6X16.5 (Ref # 92154)	92154-1698	2
KIT-ACCESSORY,HANDLE WEIGHT (Ref # 99994)	99994-1047	1
KIT-ACCESSORY,HANDLE (Ref # 99994A)	99994-1252	1

© 2025 Kawasaki Motors Corp., U.S.A.