2020 NINJA H2™ PARTS DIAGRAM

Owner's Tools

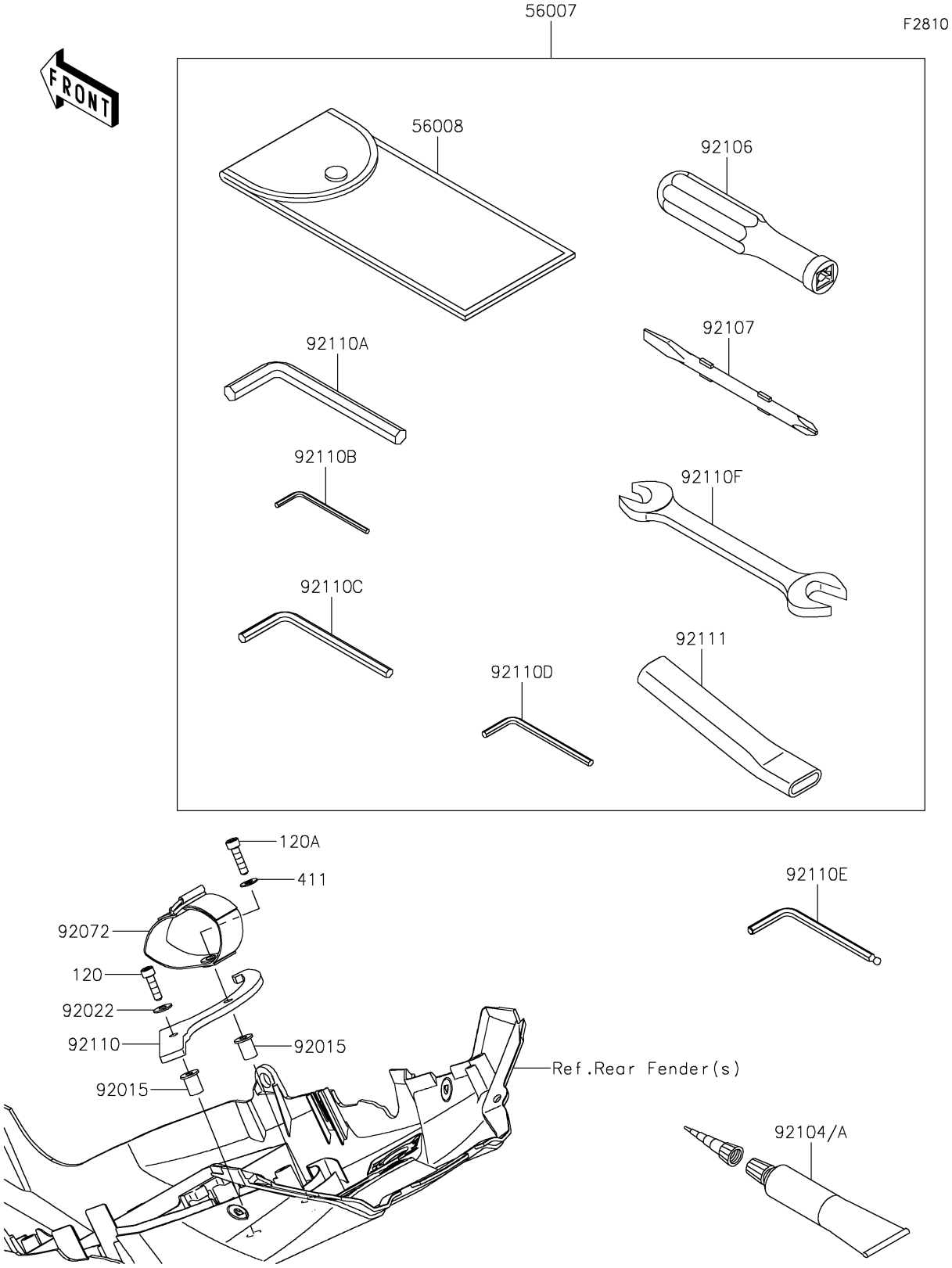

© 2025 Kawasaki Motors Corp., U.S.A.

2020 NINJA H2™ PARTS LIST

Owner's Tools

ITEM NAME	PART NUMBER	QUANTITY
TOOL-KIT (Ref # 56007)	56007-0134	1
BAG,TOOL (Ref # 56008)	56008-006	1
NUT,WELL,5MM (Ref # 92015)	92015-1757	2
WASHER,5.2X13X1 (Ref # 92022)	92022-1380	1
BAND,TOOL CASE (Ref # 92072)	92072-1219	1
GASKET-LIQUID,TB1211F,CLEAR (Ref # 92104)	92104-0004	1
GASKET-LIQUID,TB1216B,BLACK (Ref # 92104A)	92104-1064	1
GRIP-SCREW DRIVER (Ref # 92106)	92106-1001	1
TOOL-DRIVER,#2PHILLIPS&SLOT (Ref # 92107)	92107-1052	1
TOOL-WRENCH,HOOK,R61.5 (Ref # 92110)	92110-0588	1
TOOL-WRENCH,ALLEN,10MM (Ref # 92110A)	92110-0589	1
TOOL-WRENCH,ALLEN,3MM (Ref # 92110B)	92110-0594	1
TOOL-WRENCH,ALLEN,6MM (Ref # 92110C)	92110-0596	1
TOOL-WRENCH,ALLEN,4MM (Ref # 92110D)	92110-0602	1
TOOL-WRENCH,ALLEN,5MM (Ref # 92110E)	92110-0608	1
TOOL-WRENCH,OPEN END,14X17 (Ref # 92110F)	92110-1166	1
TOOL-BAR,EXTENSION (Ref # 92111)	92111-0009	1
BOLT-SOCKET,5X18 (Ref # 120)	120CB0518	1
BOLT-SOCKET,5X20 (Ref # 120A)	120CB0520	1
WASHER-PLAIN,5MM (Ref # 411)	411AB0500	1

© 2025 Kawasaki Motors Corp., U.S.A.