2020 NINJA H2™ PARTS DIAGRAM

Steering Damper

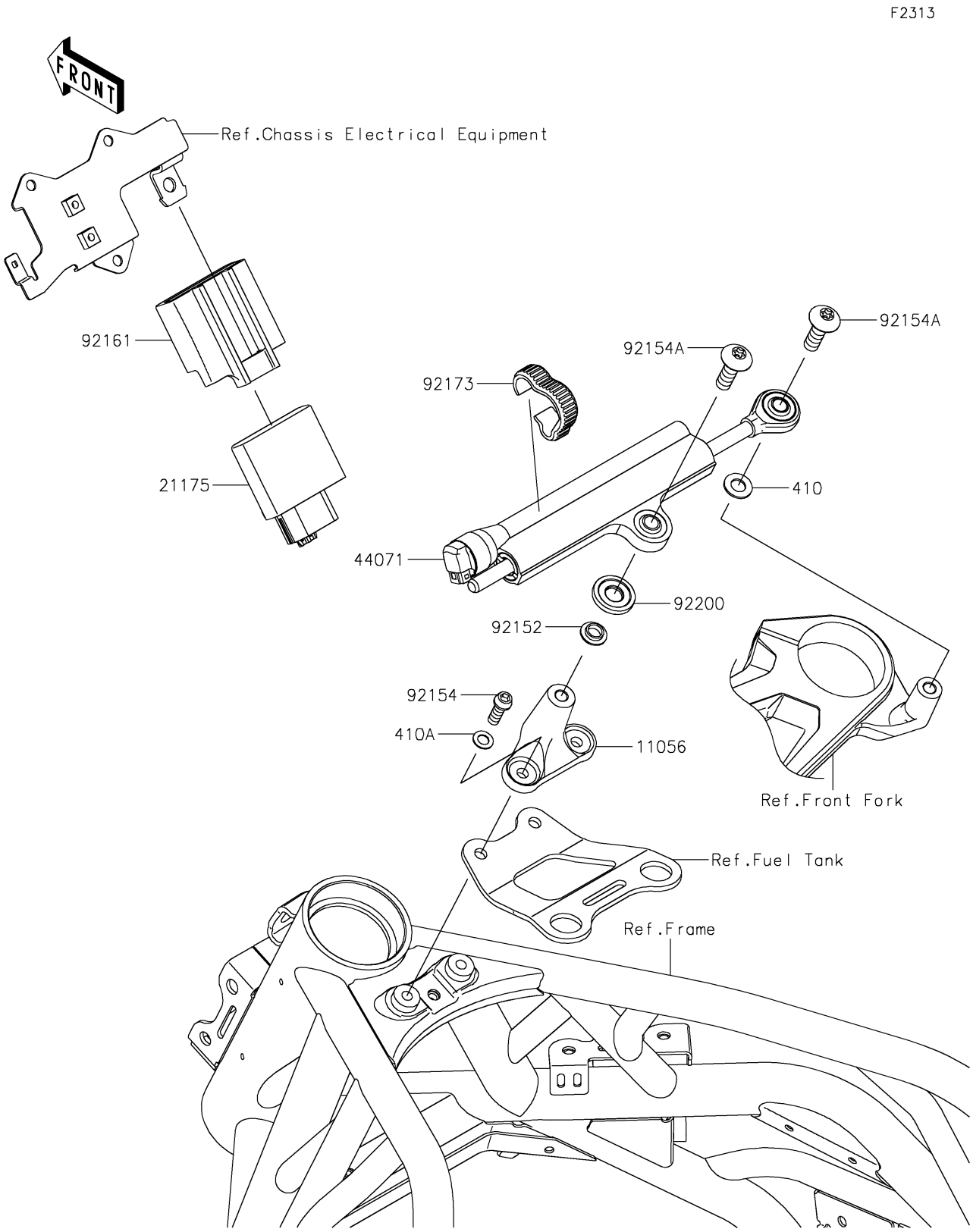

© 2025 Kawasaki Motors Corp., U.S.A.

2020 NINJA H2™ PARTS LIST

Steering Damper

ITEM NAME	PART NUMBER	QUANTITY
BRACKET,STEERING DAMPER (Ref # 11056)	11056-4360	1
CONTROL UNIT-ELECTRONIC,OHLINS (Ref # 21175)	21175-1186	1
DAMPER-ASSY (Ref # 44071)	44071-0857	1
COLLAR,L=3.3 (Ref # 92152)	92152-0834	1
BOLT,SOCKET,6X18 (Ref # 92154)	92154-1564	2
BOLT,TORX,8X26 (Ref # 92154A)	92154-1897	2
DAMPER,ECU (Ref # 92161)	92161-1729	1
CLAMP (Ref # 92173)	92173-1023	1
WASHER,10.5X24X3.5 (Ref # 92200)	92200-1727	1
WASHER-PLAIN-SMALL,8MM (Ref # 410)	410AA0800	1
WASHER-PLAIN-SMALL,6MM (Ref # 410A)	410AB0600	2

© 2025 Kawasaki Motors Corp., U.S.A.