2020 NINJA H2™ PARTS DIAGRAM

Brake Pedal/Torque Link

F2260

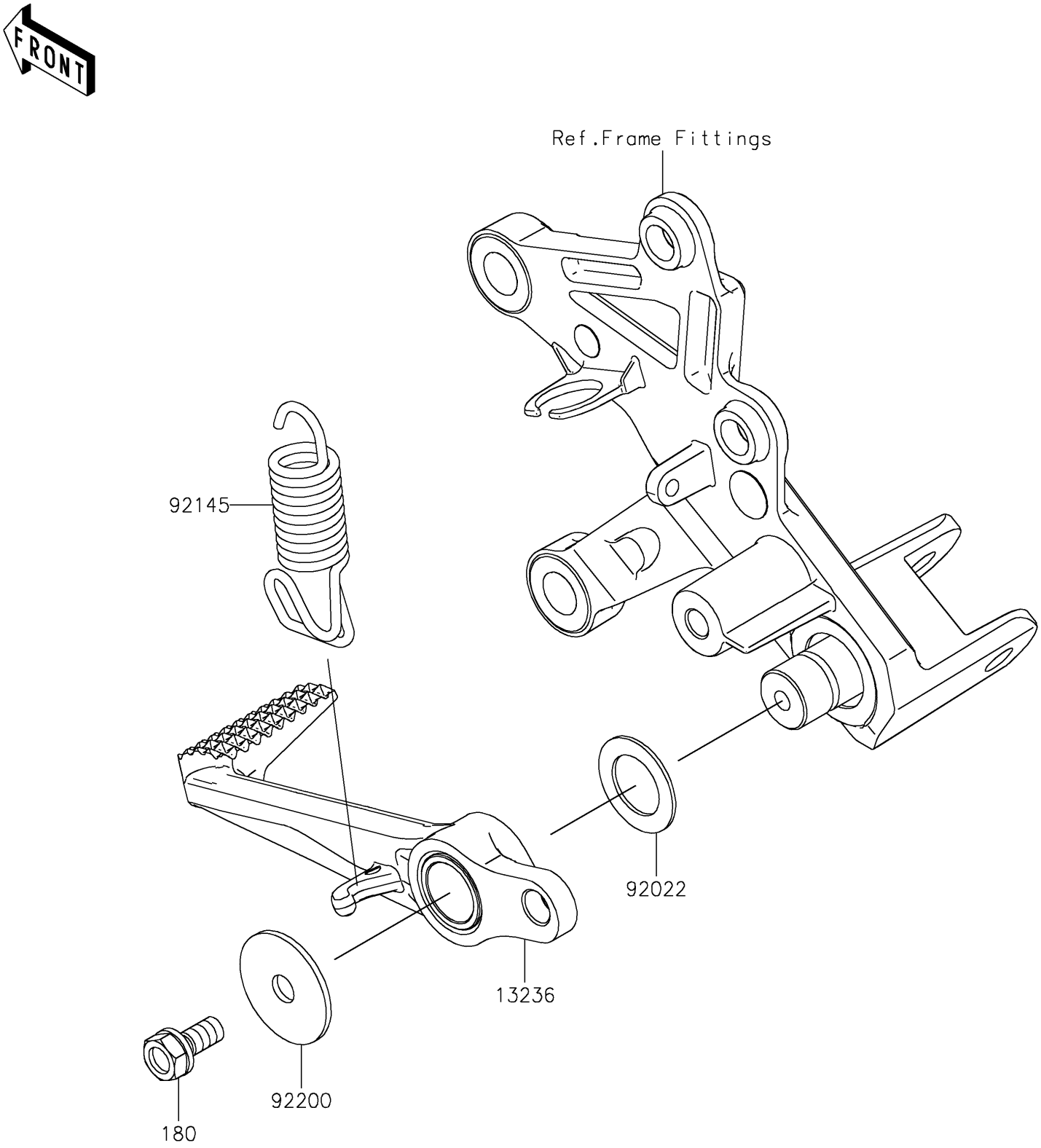

© 2025 Kawasaki Motors Corp., U.S.A.

2020 NINJA H2™ PARTS LIST

Brake Pedal/Torque Link

ITEM NAME	PART NUMBER	QUANTITY
LEVER-COMP,BRAKE PEDAL (Ref # 13236)	13236-0762	1
WASHER,15.3X24X1 (Ref # 92022)	92022-326	1
SPRING,BRAKE RETURN (Ref # 92145)	92145-1688	1
WASHER,7X28X1.6 (Ref # 92200)	92200-0279	1
BOLT-UPSET-WS,6X14 (Ref # 180)	180BA0614	1

© 2025 Kawasaki Motors Corp., U.S.A.