1989 Big Wheel PARTS DIAGRAM

Stand(s)

F2190-0186

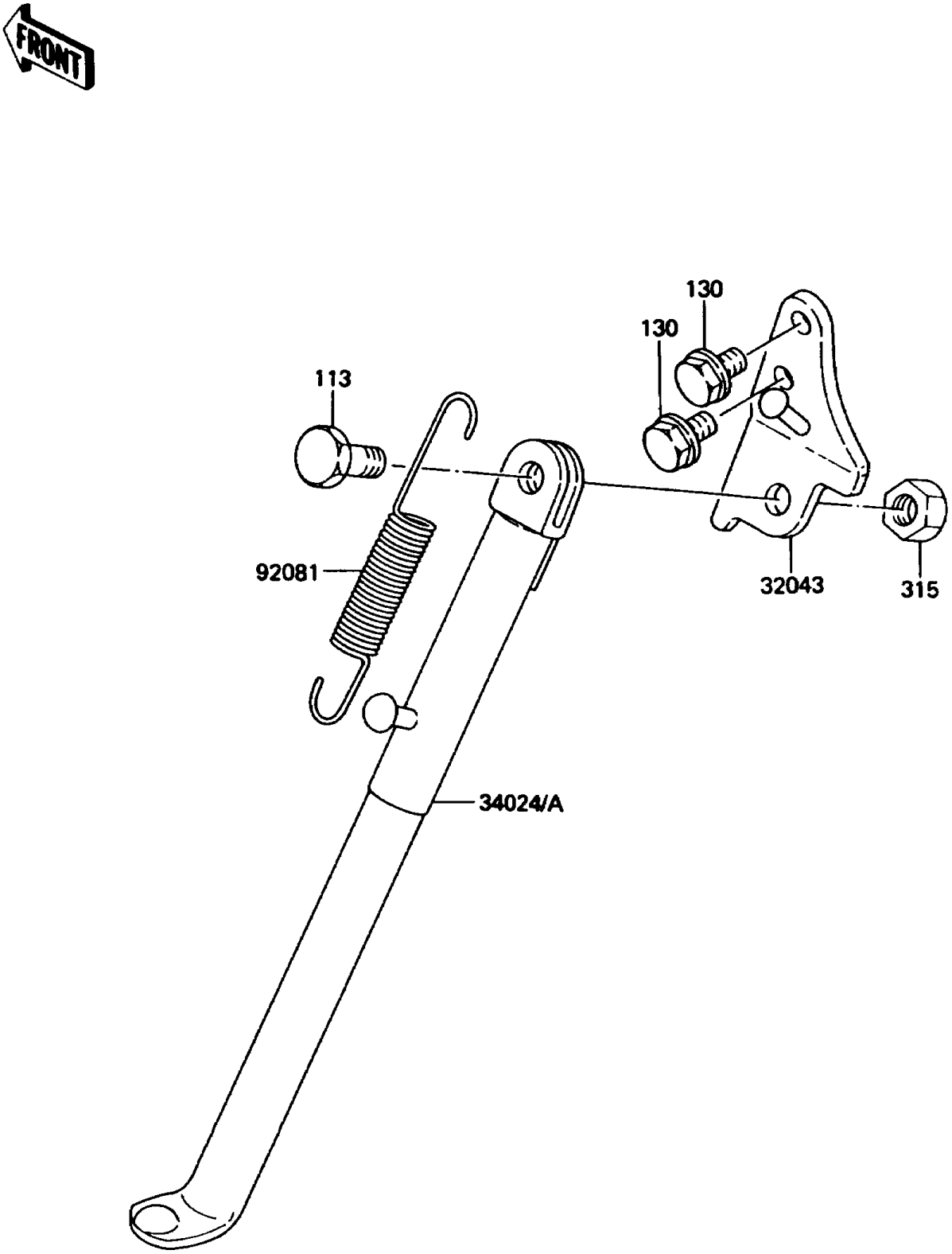

© 2026 Kawasaki Motors Corp., U.S.A.

1989 Big Wheel PARTS LIST

Stand(s)

ITEM NAME	PART NUMBER	QUANTITY
BRACKET-STAND,SIDE (Ref # 32043)	32043-1318	1
STAND-SIDE (Ref # 34024A)	34024-1242	1
SPRING,STAND (Ref # 92081)	34025-005	1
BOLT-SMALL-FINE,10X25 (Ref # 113)	113B1025	1
BOLT-FLANGED,8X12 (Ref # 130)	130G0812	2
NUT-HEX-FINE,10MM (Ref # 315)	315B1000	1

© 2026 Kawasaki Motors Corp., U.S.A.