1990 Big Wheel PARTS DIAGRAM

Crankcase

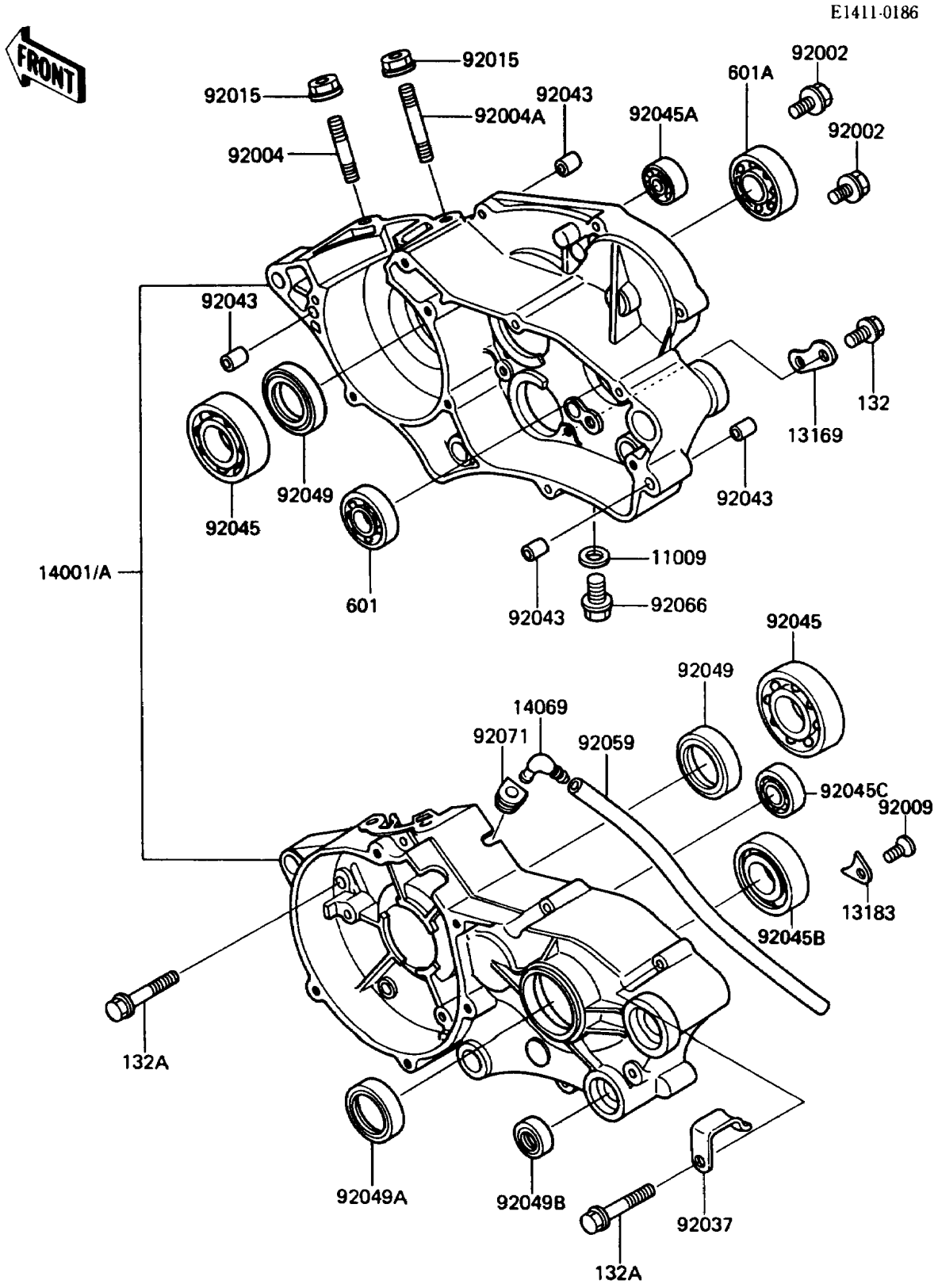

© 2024 Kawasaki Motors Corp., U.S.A.

1990 Big Wheel PARTS LIST

Crankcase

ITEM NAME	PART NUMBER	QUANTITY
GASKET,10.5X16X1,DRAIN PLUG (Ref # 11009)	92065-058	1
PLATE,CHANGE DRUM (Ref # 13169)	13169-012	1
PLATE (Ref # 13183)	13183-1182	2
SET-CRANKCASE (Ref # 14001A)	14001-5272	1
BREATHER,CRANKCASE (Ref # 14069)	14069-002	1
BOLT,6X16 (Ref # 92002)	92002-1659	2
STUD,8X25 (Ref # 92004)	92004-1008	2
STUD,8X35 (Ref # 92004A)	92004-1009	2
SCREW,6X10 (Ref # 92009)	92009-1563	2
NUT,8MM (Ref # 92015)	92015-1143	4
CLAMP,HARNESS (Ref # 92037)	92037-1318	1
PIN,DOWEL,6.3X8X14 (Ref # 92043)	92042-007	4
BEARING-BALL,R-6304C3 (Ref # 92045)	92045-1059	2
BEARING-BALL (Ref # 92045A)	92045-1211	1
BEARING-BALL,6204 (Ref # 92045B)	92045-1226	1
BEARING-BALL,6001C3ML01 (Ref # 92045C)	92045-1235	1
SEAL-OIL,SD20407GS (Ref # 92049)	92049-1188	2
SEAL-OIL,TC25375 (Ref # 92049A)	92049-1292	1
SEAL-OIL,TB13225.5 (Ref # 92049B)	92051-005	1
TUBE,6X9X280 (Ref # 92059)	92059-1074	1
PLUG,DRAIN (Ref # 92066)	92066-1241	1
GROMMET,BREATHER (Ref # 92071)	92071-042	1
BOLT-FLANGED-SMALL (Ref # 132)	132G0612	2
BOLT-FLANGED-SMALL (Ref # 132A)	132G0635	9
BEARING-BALL (Ref # 601)	601A6002	1
BEARING-BALL,#6203 (Ref # 601A)	601A6203	1

© 2024 Kawasaki Motors Corp., U.S.A.