2022 Z900RS SE PARTS DIAGRAM

Accessory(Center Stand)

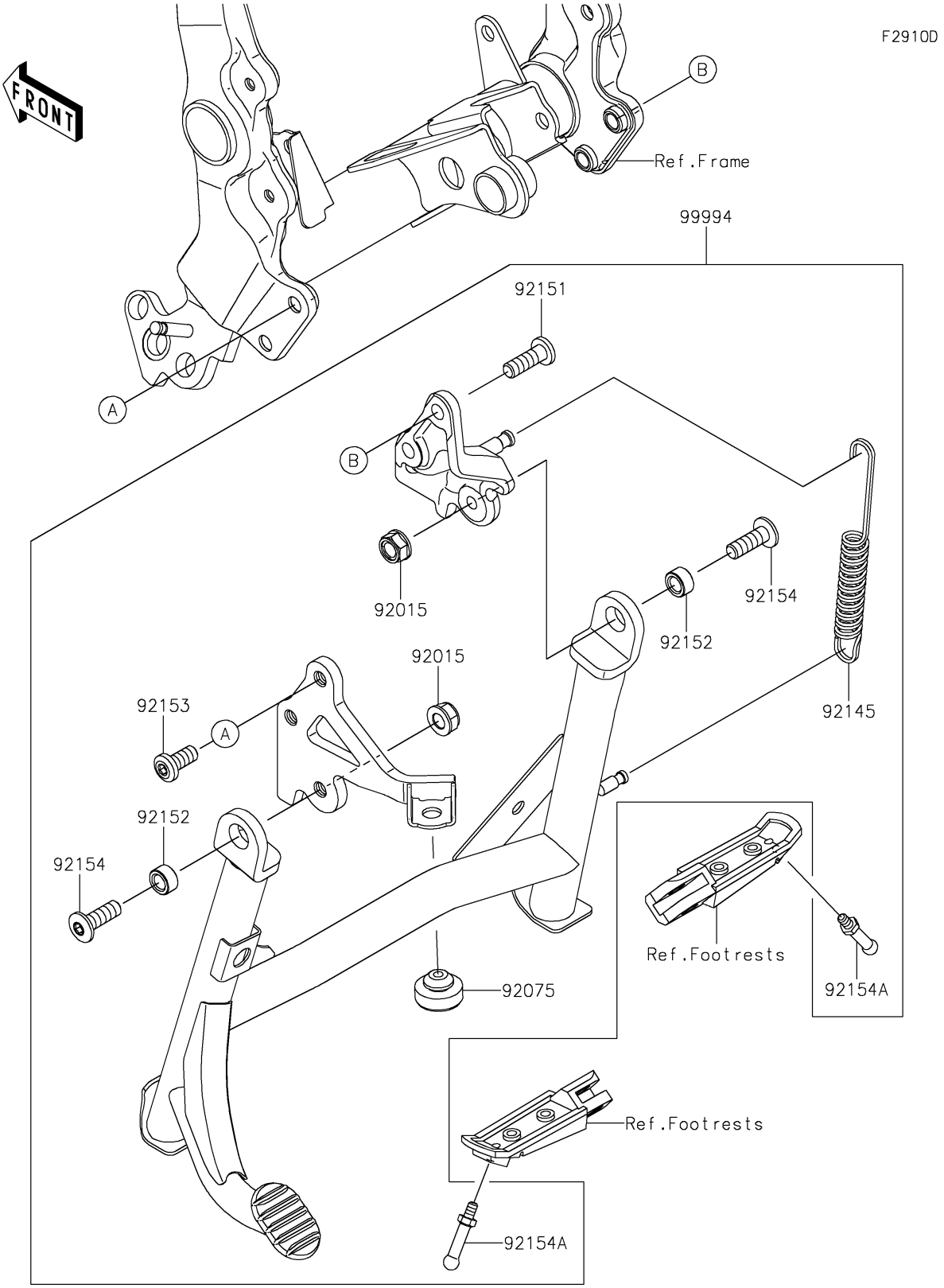

© 2024 Kawasaki Motors Corp., U.S.A.

2022 Z900RS SE PARTS LIST

Accessory(Center Stand)

ITEM NAME	PART NUMBER	QUANTITY
NUT,LOCK,FLANGED,10MM (Ref # 92015)	92015-1717	2
DAMPER (Ref # 92075)	92075-1045	1
SPRING,STAND (Ref # 92145)	92145-0071	1
BOLT,SOCKET,10X30 (Ref # 92151)	92151-1372	2
COLLAR,10X17X9 (Ref # 92152)	92152-1906	2
BOLT,SOCKET,10X22 (Ref # 92153)	92153-1477	2
BOLT,SOCKET,10X30 (Ref # 92154)	92154-1665	2
BOLT,BANK SENSOR (Ref # 92154A)	92154-3985	2
KIT-ACCESSORY,CENTER STAND (Ref # 99994)	99994-1283	1

© 2024 Kawasaki Motors Corp., U.S.A.