2022 Z650RS ABS PARTS DIAGRAM

Accessory(Cover)

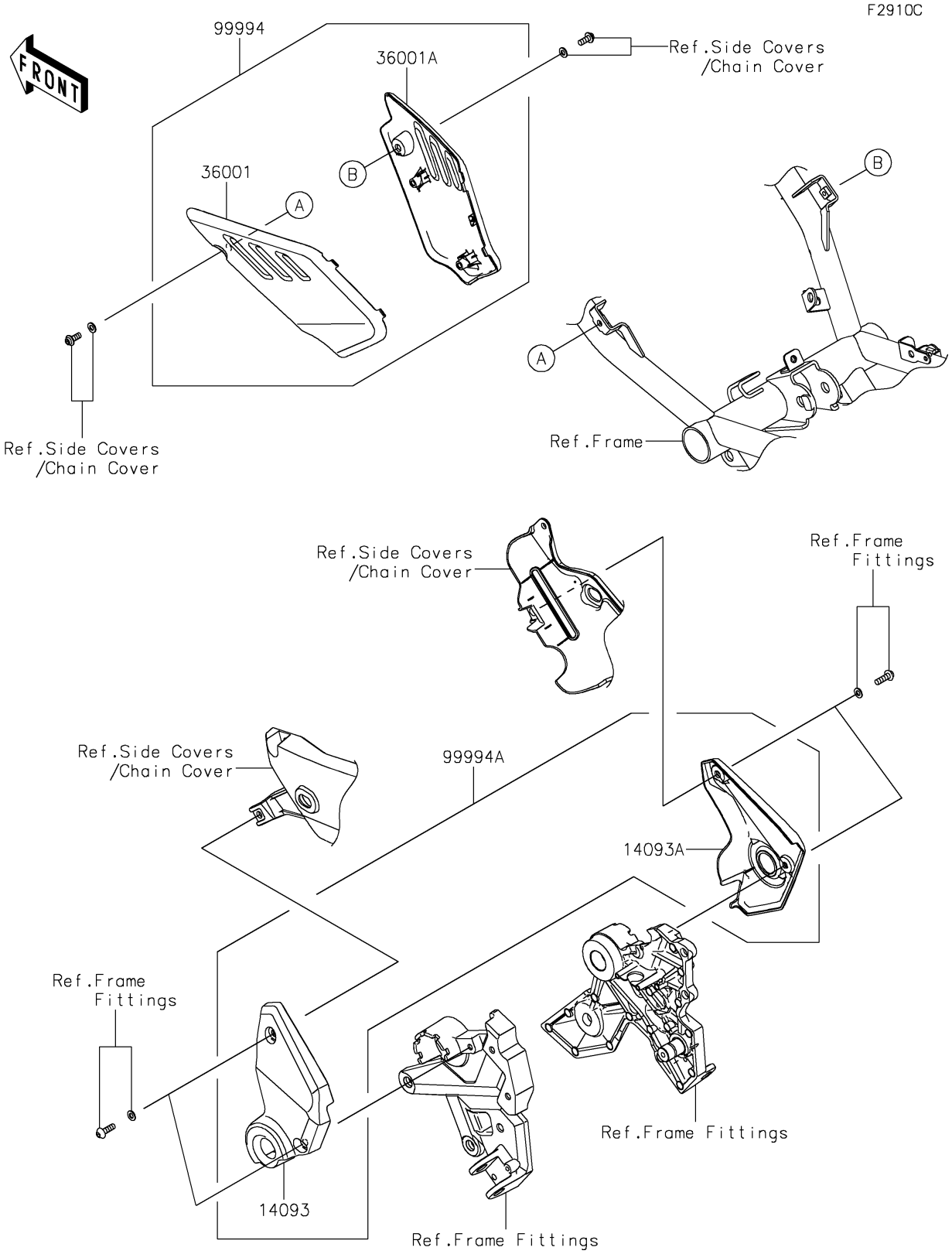

© 2025 Kawasaki Motors Corp., U.S.A.

2022 Z650RS ABS PARTS LIST

Accessory(Cover)

ITEM NAME	PART NUMBER	QUANTITY
COVER,LH,B.B.SILVER (Ref # 14093)	14093-1266-63E	1
COVER,RH,B.B.SILVER (Ref # 14093A)	14093-1267-63E	1
COVER-SIDE,LH,F.EBONY (Ref # 36001)	36001-0728-45L	1
COVER-SIDE,RH,F.EBONY (Ref # 36001A)	36001-0729-45L	1
COVER-KNEE GRIP,F.EBONY (Ref # 99994)	99994-1550-45L	1
COVER-PIVOT,B.B.SILVER (Ref # 99994A)	99994-1551-63E	1

© 2025 Kawasaki Motors Corp., U.S.A.