2022 Z650RS ABS PARTS DIAGRAM

Rear Fender(s)

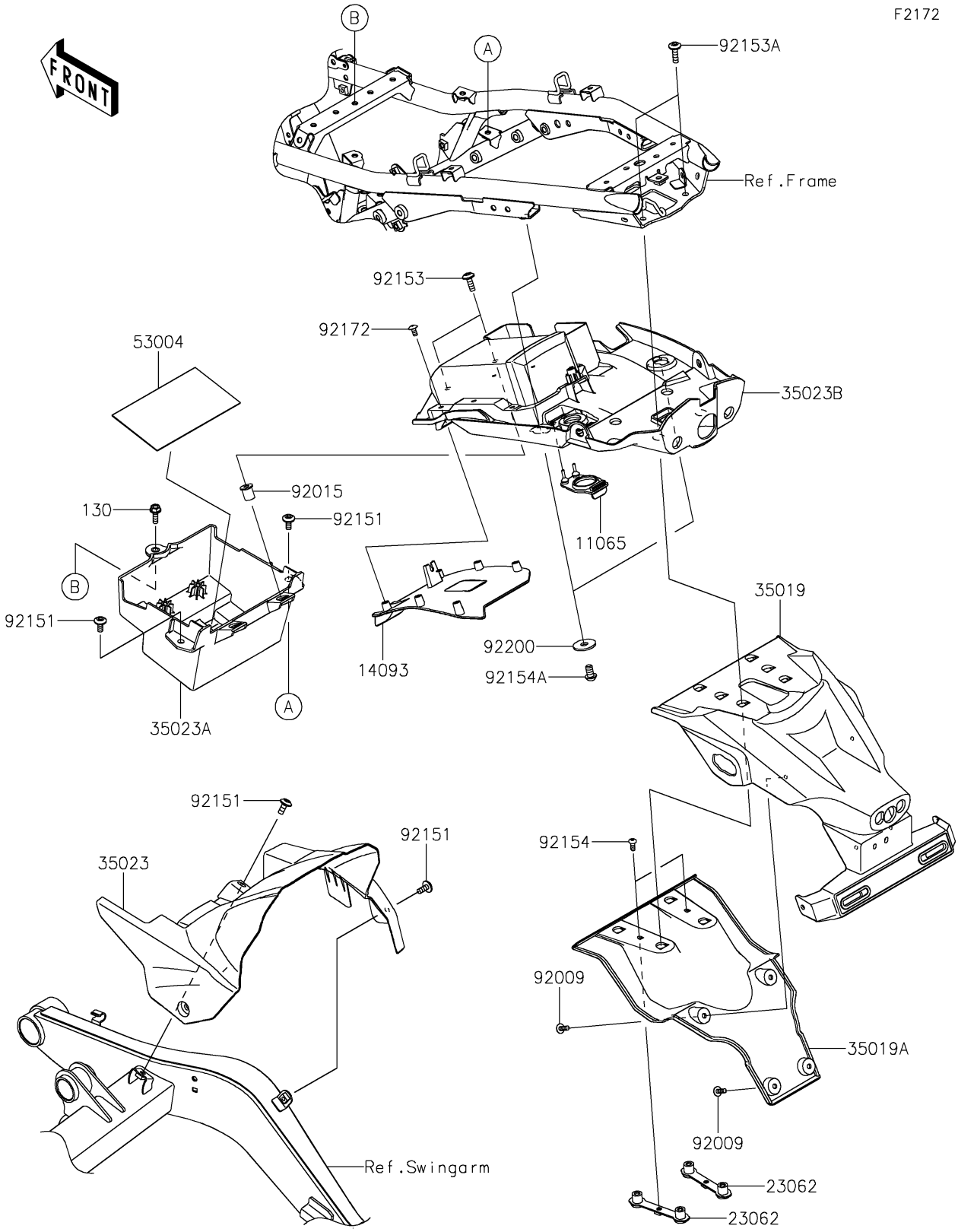

© 2025 Kawasaki Motors Corp., U.S.A.

2022 Z650RS ABS PARTS LIST

Rear Fender(s)

ITEM NAME	PART NUMBER	QUANTITY
CAP (Ref # 11065)	11065-1375	1
COVER,CANISTER (Ref # 14093)	14093-1101	1
BRACKET-COMP,RR FENDER (Ref # 23062)	23062-1314	2
FLAP,UPP (Ref # 35019)	35019-0684	1
FLAP,LWR (Ref # 35019A)	35019-0685	1
FENDER-REAR (Ref # 35023)	35023-0417	1
FENDER-REAR,FR (Ref # 35023A)	35023-0483	1
FENDER-REAR,RR (Ref # 35023B)	35023-0484	1
MAT,BATTERY (Ref # 53004)	53004-0560	1
SCREW,TAPPING,5X14 (Ref # 92009)	92009-1197	4
NUT (Ref # 92015)	92015-1700	2
BOLT,SOCKET,6X14 (Ref # 92151)	92151-1654	4
BOLT,6X18 (Ref # 92153)	92153-0816	2
BOLT,SOCKET,6X22 (Ref # 92153A)	92153-1356	2
BOLT,SOCKET,5X12 (Ref # 92154)	92154-1471	2
BOLT,SOCKET,8X14 (Ref # 92154A)	92154-2651	2
SCREW,5X10 (Ref # 92172)	92172-0864	6
WASHER,9X28X2.3 (Ref # 92200)	92200-1951	2
BOLT-FLANGED,6X18 (Ref # 130)	130BA0618	1

© 2025 Kawasaki Motors Corp., U.S.A.