2022 Z650RS ABS PARTS DIAGRAM

Front Fender(s)

F2171

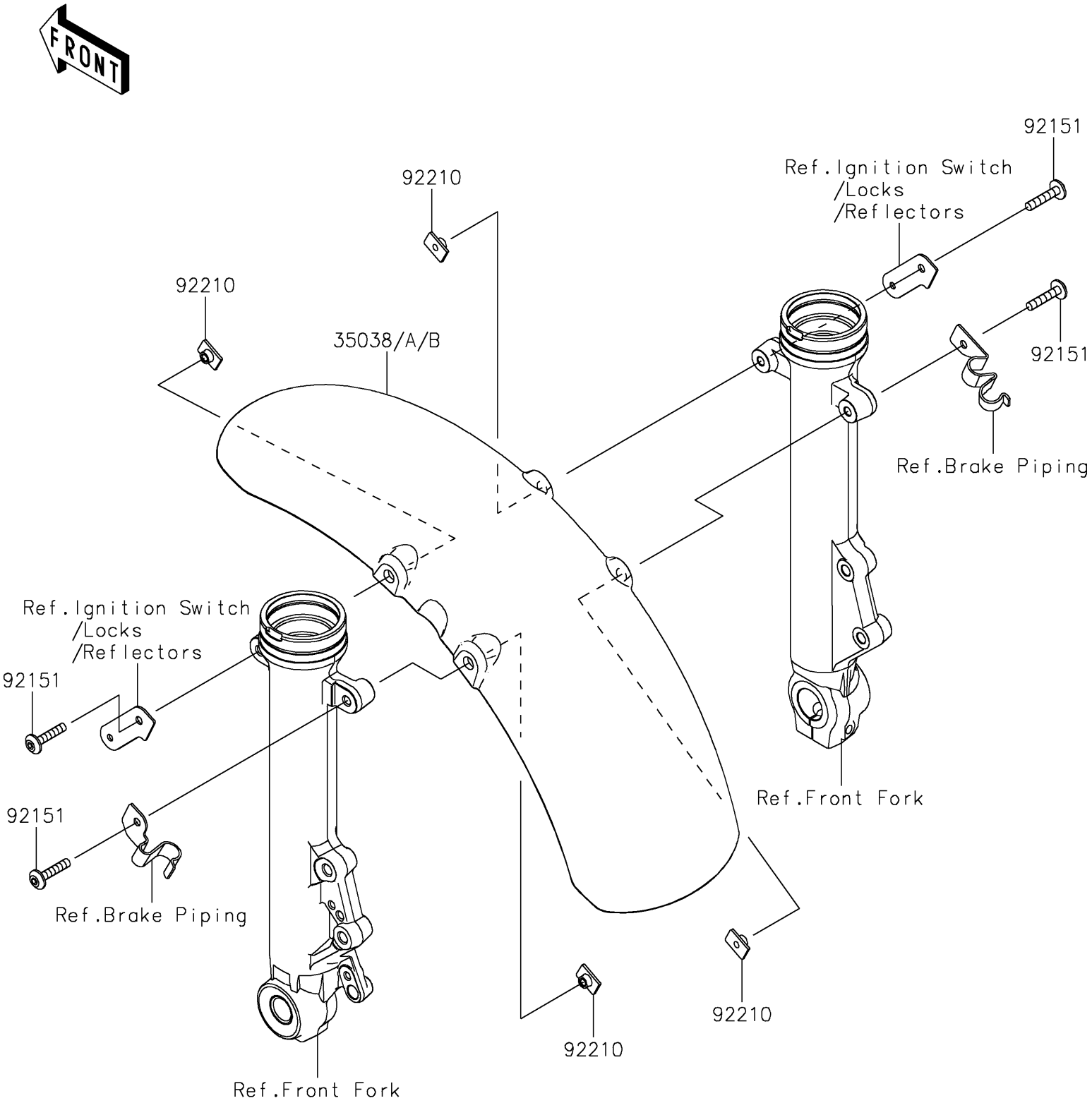

© 2025 Kawasaki Motors Corp., U.S.A.

2022 Z650RS ABS PARTS LIST

Front Fender(s)

ITEM NAME	PART NUMBER	QUANTITY
FENDER-FRONT,C.E.GREEN (Ref # 35038)	35038-0031-63H	1
FENDER-FRONT,M.S.BLACK (Ref # 35038A)	35038-0031-660	1
FENDER-FRONT,EBONY (Ref # 35038B)	35038-0031-H8	1
BOLT,SOCKET,6X30 (Ref # 92151)	92151-1605	4
NUT,PLATE,6MM (Ref # 92210)	92210-1352	4

© 2025 Kawasaki Motors Corp., U.S.A.