# 2022 Z650RS ABS PARTS DIAGRAM

## Oil Pump/Oil Filter

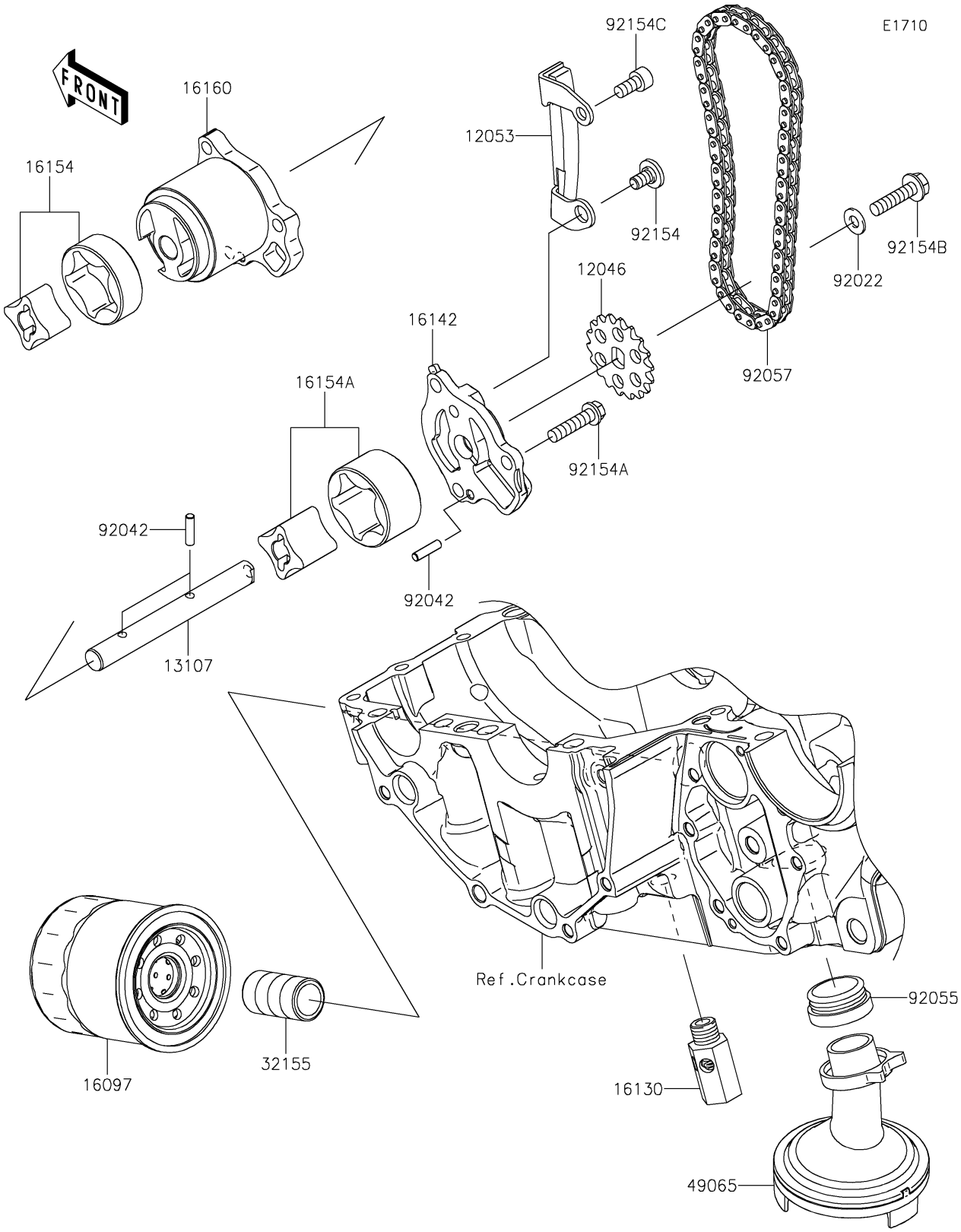


© 2025 Kawasaki Motors Corp., U.S.A.

# 2022 Z650RS ABS PARTS LIST

## Oil Pump/Oil Filter

| ITEM NAME | PART NUMBER | QUANTITY |
|---|---|---|
| SPROCKET,18T,BF04M (Ref # 12046) | 12046-0040 | 1 |
| GUIDE-CHAIN (Ref # 12053) | 12053-0071 | 1 |
| SHAFT,OIL PUMP (Ref # 13107) | 13107-0772 | 1 |
| FILTER-ASSY-OIL (Ref # 16097) | 16097-0008 | 1 |
| VALVE-ASSY-RELIEF (Ref # 16130) | 16130-0552 | 1 |
| COVER-PUMP (Ref # 16142) | 16142-0712 | 1 |
| ROTOR-PUMP,L=14 (Ref # 16154) | 16154-0037 | 1 |
| ROTOR-PUMP,40.56X22 (Ref # 16154A) | 16154-1115 | 1 |
| BODY (Ref # 16160) | 16160-0110 | 1 |
| PIPE,OIL FILTER (Ref # 32155) | 32155-0029 | 1 |
| FILTER-OIL (Ref # 49065) | 49065-0708 | 1 |
| WASHER,6X12.8X1.2 (Ref # 92022) | 92022-1827 | 1 |
| PIN,DOWEL,4X15.8 (Ref # 92042) | 92042-014 | 3 |
| RING-O,OIL FILTER (Ref # 92055) | 92055-1354 | 1 |
| CHAIN,DID 215FD-DHA,56LE (Ref # 92057) | 92057-0098 | 1 |
| BOLT,SOCKET,6X11 (Ref # 92154) | 92154-0188 | 1 |
| BOLT,FLANGED,6X25 (Ref # 92154A) | 92154-0783 | 3 |
| BOLT,FLANGED,6X25 (Ref # 92154B) | 92154-0811 | 1 |
| BOLT,SOCKET,6X12 (Ref # 92154C) | 92154-0812 | 1 |

© 2025 Kawasaki Motors Corp., U.S.A.